DYNABRADE® VIRTUBRADE™

Parts Page Reorder No. PD99•28
Effective June, 1999
Supersedes PD97•20

# 66501 Virtufinisher Instruction Manual

Electric Powered Superfinishing Abrasive Machine

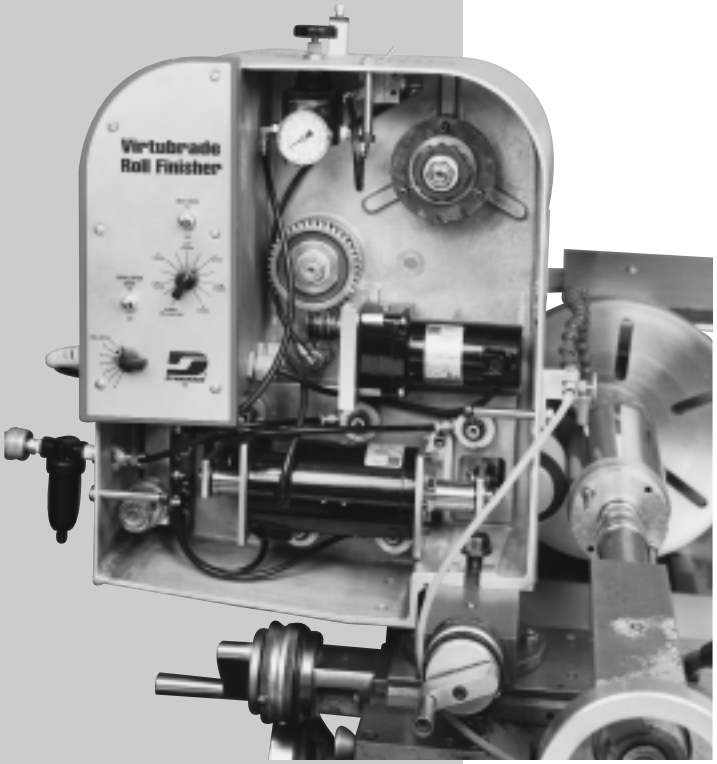


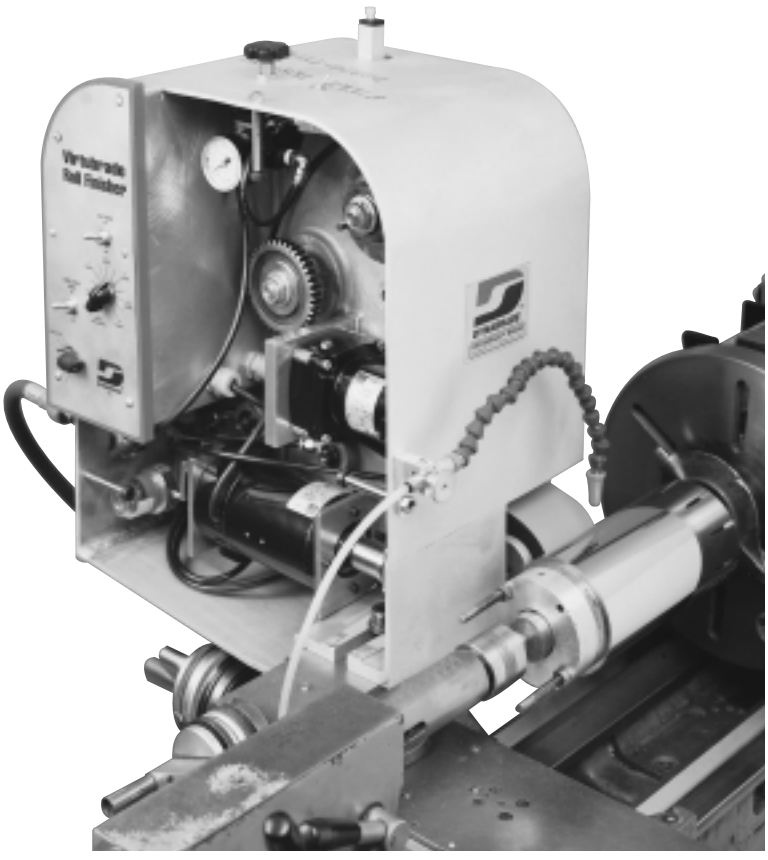

# Dynabrade Virtufinisher – Model 66501

## General Description:

A lathe mounted machine which is used to produce repeatable, predictable surface textures on any variety of cylindrical components, regardless of material. This machine utilizes micro abrasives technology introduced to the market by 3M. By producing an abrasive belt which utilizes a dimensionally precise polyester film backing, selective abrasive grain sizing and placement of these grains onto this film backing, a uniform abrasive product is available which will roll grind or polish work piece diameters to a specific surface finish without random deep scratches or grooves. These abrasives are sold in spool form on 3" diameter keyed cores (4-1/4" wide keyway grooves staggered 90 degrees apart on the ID of the core) with lengths of 50 and 150' available. Dynabrade Virtufinisher was designed to accommodate 150' long spools of abrasive (providing that the spool diameter does not exceed 7 inches.).

## Machine Installation:

**This machine was designed specifically for use on smaller machine shop.lathes (between 9" and 15" swing). refer to assembly drawing provided.**

1. Using mounting surface “A”, the machine is to be set atop the lathe compound and fastened securely using a T-nut and bolt (Drawing 1).
2. The distance from surface”A” to the operating centerline of the machine is 1-5/8".
   **Note:** In some cases spacer may be needed to attach the operating centerline of the machine to the lathe centerline height.
3. Insure that the machine is positioned perfectly parallel to the lathe centerline prior to final tightening.
4. Machine can now be plugged into an ordinary 115V 1 phase outlet and connect to a 90PSI air supply.
5. Selected abrasive can now be loaded (see loading instructions).

### Optional Mounting Instructions for larger machines:

1. Mounting surface “B” is provided for installation onto very large lathes or similar equipment.
2. Locate the six 3/16-16 tapped holes provided for fixturing to this equipment.
   Note: The distance between surface “B” and the operating centerline is 3-3/8”.
3. Insure that the machine is positioned perfectly parallel to the lathe centerline prior to final tightening.
4. Machine can now be plugged into an ordinary 115V 1 phase outlet and connect to a 90PSI air supply.
5. Selected abrasive can now be loaded (see loading instructions).

## Abrasive Installation:

**This machine uses 3" wide abrasives as standard. Spacers and contact rollers are available in varied increments as narrow as 1/2" wide.**

1. Unroll about 3' of abrasive from new spool.
2. Loosen knob (#40) a few turns on Spool Hub #1. This allows th o-ring (#10) to retract the four spool locks (#4) via the conical bushing (#5).
3. Align key slots of spool over the top of the spool locks(#4) and slide spool on until contact is made on shoulder of Spool Hub (#7).
4. Slightly tighten knob (#40). This action causes retainer (#3) to force the spool locks upwards on the slope of the conical bushing (#5) and into the keyways supplied on the abrasive core.
5. Install empty abrasive core in safe fashion as above to Spool Hub #2.
6. Route lead end of abrasive as follows:
   **a)** Align around Roller (R1), then around Contact Wheel (CW).
   **b)** Align around the second Roller (R2) and finally to empty spool core located at (SH2).
   **c)** Apply a small piece of tape to lead end and to empty core at this position.
   Note: Abrasive can be lengthened or retracted by manually turning abrasive roll at SH1.
7. Connect tool to power source and turn Control (CP1) to full (clockwise to 4”/p/min. setting).
8. Allow abrasive to overlap itself at least 1 full turn at SH2. This will ensure a positive feed of abrasive once operation begins.
9. Turn machine off (S1) and return Control (CP1) to desired position.
10. Machine is now ready for operation.

## Operating Instructions:

1. Install workpiece on lathe. regardless if driving on centers or with a chuck or collet arrangement, move carriage to both sides of workpiece to ensure adequate clearance of tailstock, chuck or rotating members. Set safety stops if necessary.
2. Position coolant nozzles (if used) at interface of workpiece and contact wheel.
   **Note:** A staggered filtration system is recommended that will filter out particles at least as small as the finest micron grade abrasive to be used.
3. If possible, rotate workpiece in opposite direction of abrasive advance. Starting points can be obtained through your abrasive supplier. Recommended starting points based on material type and diameter.
4. Position contact wheel at either end and within 1/2" distance fro workpiece.
5. Switch on belt drive at S1 of Control Console (#37)
6. Switch on Oscillation Drive at S2 of Control Console (#37). Set oscillation frequency by Control POT (CP2) of Control Console (#37).
7. Maximum frequency is 30 cycles per second. Each gradation represents 4 cycles. Example: Setting 1 equals 9 cycles/second, 2 equals 13 cycles/second.
8. Begin coolant flow (if used).
9. Start lathe traverse in one direction (if workpiece is longer than 3").
10. Engage contact wheel (#38) by throwing switch at air valve (#67). Pressure reading at gage (#68) should be about 40 PSI as a starting point.
11. Allow traverse to one end and then back again.
12. Disengage Contact Wheel using Air Valve (AV1).
13. Shut down traverse, coolant, lathe belt drive and oscillation.

If expected results are achieved continue in same manner as depicted. Minor adjustments to starting points are expected,including infeed pressure, oscillation frequency, and abrasive advance. Some experiments may be involved. It becomes necessary to document all aspects of the operation once satisfactory results are achieved, thereby creating a process which is repeatable and predictable time after time. Coolant flow, type and concentration is important as well.

# Dynabrade Virtufinisher – Model 66501

## Time Estimate Fro Superfinishing:

The Factors which determine this are:

1. Surface area of the roll.
2. Starting finish of the roll in RA (micrometers or microfinishes).
3. Desired resultant finish.
4. Abrasive width (3 inches or 75 mm).

The surface area is determined by multiply the diameter of our roll by 3.1416 to obtain the circumference and then multiply this figure by the length of the roll.

**Example:** 6" (152.4 mm) diameter x 36" (914.4 mm) length

6 x 3.1416 x 36 = 680 sq. inches (438709 sq. mm).

Therefore Dynabrade's Virtufinisher can finish a roll at the rate of 56 sq. inches (36129 sq. mm) per minute per sequence. The roll of 680 sq. inches (438709 sq. mm) will take about 12.2 minutes per sequence (680/56 = 12). In most cases, a sequence involves passing the abrasive along the length of the roll, first in one direction and then back again. The lathe that can be set up so that it takes 6.1 minutes to traverse the 36" (914.4 mm) length of the roll (6.1 minutes, one way and 6.1 minutes back = 12 minutes). the traverse rate can be expressed in terms of inches or millimeters per minute by dividing the length of the roll by 6.1 (36/6.1 = 5.9 on./min. traverse rate or 150 mm/min.).

If the material of our roll is chrome, with a starting finish of 20 RA microinches, and a desired resultant finish of 2-3 microinches, we can see by example that this process can be preformed in 3 sequences. Using 60 micron IMMFF to, reduce the finish to 12-14 RA, the second using 30 micron IMFF to reduce the finish to 5-6 RA, and the last using 15 micron IMff to produce our desired resultant finish of 2-3 RA microinches.

Based on the above, it is reasonable to say it will take 36.6 minutes to finish the roll (3 sequences x 12.2 minutes = 36.6 minutes). Allowing enough time for an additional sequence will ensure a good representation should any of the sequences reveal flaws in the material or need repeating.

The above formulas can be used for any bar at any diameter, complete lists of case studies on various materials are available from Dynabrade, Inc. and 3M Co. SMSD.

## Abrasive Estimate:

The Abrasive cost can also be estimated:

**Example:** The Virtufinisher has an adjustable abrasive advance from 1-4 inches per minute (25-100mm).
The abrasive width is 3 inches or 75 mm.

Based on the above, each sequence took approximately 12.2 minutes to perform. At an abrasive advance of 1 inch per minute, we will have consumed 12.2 linear inches of abrasive x 3 inch of width = 36.6 square inches of abrasive per sequence (23616 sq. mm). Similarly 4 inches per minute we will have consumed 146.4 sq. inches (94451 sq. mm) of abrasive per sequence. Multiply this number by the required number of sequences and arrive at the total abrasive consumed. Typically, harder materials require a slower abrasive advance while softer, gummier materials require a faster advance to prevent loading of the abrasive and burnishing of the workpiece

## U.S. / Metric Equivalents:

Inches x 25.4 = Millimeters / Millimeters x 0.03937 = Inches

RA Microinches x 0.0254 = RA Micrometers / RA Micrometers x 39.37 = RA Microinches

Square Inches x 645.16 = Square Millimeters / Square Millimeters x 0.00155 = Square Inches

Pounds x 0.4536 = Kilograms / Kilograms x 2.2046 = Pounds

Pounds (force) x 4.448 = Newtons / Newtons x 0.2248 = Pounds (force).

## Effects of Air-Line Pressure and Wheel Hardness:

The following comparison char was compiled as a reference document to help further understand the effects of air line pressure, wheel hardness and the resultant abrasive force presented tot the workpiece. the Virtufinisher has a 2" diameter air cylinder which presents the abrasive media workpiece under pressure, via a 3" diameter x 3" wide backup roller pattern.

**Review These Factors:**

1. The output force of a cylinder is determined by it's bore diameter and the amount of air pressure supplied.
   The formula for area is:
   $A = R^{2x}\pi$
   $A = (1)^{2x}\ 3.14$
   $A = 1 \times 3.14$
   $A = 3.14$
   This means for every PSI of air presented to our cylinder, 3.14 lbs. of force is created.
   **Example:** At 20 PSI, 62.8 lbs.of force is created (20 x 3.14 = 62.8).

2. The next thing to consider is the actual contact area between the abrasive and the workpiece. Since our roller platens (contact wheels) are neoprene, they tend to "crush" or flatten out when introduced to the workpiece. The amount of "crush" is dependent on the amount of force behind it, and the hardness of the roller platen itself.

   For testing purposes, a sheet of clear polycarbonate was coated with a thin layer of grease. Wheels of different hardness were introduced to this sheet at different air line pressures. the thin layer of grease was squeezed out, leaving a clear, measurable "footprint" on the sheet. By measuring the length of this "footprint" and multiplying by the width of our wheel (3"), an actual contact area (represented in square inches) is obtained.
   **Example:** 50 length x width = 150 square inches

# Dynabrade Virtufinisher – Model 66501

**3.** The next item for consideration is "Effective Pressure". This is the actual force measured in lbs. per square inches, at the interface of the workpiece and the abrasive media.

This is found by dividing the force of the cylinder by the actual contact area:

$$E = F/A$$

The following chart represents the findings of the test described above:

| Roller Platen (Durometer) | Gauge Pressure (PSI) | Force of Cylinder (lbs.) | Contact Area (sq. in.) | Effective Pressure (lbs. per sq. in.) |
|---|---|---|---|---|
| 85 | 40 | 125.6 | 0.9 | 139.5 |
| 85 | 60 | 188.4 | 1.05 | 17.4 |
| 85 | 80 | 251.2 | 1.2 | 209.2 |
| 70 | 40 | 125.6 | 1.35 | 93.0 |
| 70 | 60 | 188.4 | 1.65 | 114.2 |
| 70 | 80 | 251.2 | 1.95 | 128.8 |
| 50 | 40 | 125.6 | 1.95 | 64.4 |
| 50 | 60 | 188.4 | 2.25 | 83.7 |
| 50 | 80 | 251.2 | 2.55 | 98.5 |

Note: The comparison of the 50 and 85 durometer wheels at 80 lbs. per sq. in. gauge. While the force of the cylinder was the same at 251.2 lbs., the "Effective Pressure" jumped from 98.5 all the way up to 209.2 lbs. per sq. in. due to the reduction in contact area. Abrasives provide a better cut rate at certain pressures. Some give better life and some may not be able to withstand the higher cutting or infeed pressures without failing prematurely.

## Super Finishing
## Sequential Surface Finishes Obtained (RA microinch)

| Roll Material | Max Starting Finish | IMFF 3M272L 60µ | IMFF 3M272L 30µ | IMFF 3M272L 15µ | IMFF 3M272L 9µ | ILF 3M261X 30µ | ILF 3M261X 12µ | ILF 3M261X 9µ | ILF 3M261X 3µ | IPF 3M971X 1µ |
|---|---|---|---|---|---|---|---|---|---|---|
| Chrome | <20 | 12-14 | 5-6 | 2-3 | 1.5-2 | 1.5-2 | 1 | <1 | <1 | <1 |
| 6061 Aluminum | <90 | 60 | 35-38 | 26-28 | 11-13 | 11-13 | 5 | 3 | 1-2 | - |
| Brass | <90 | 80 | 31-34 | 11 | 4-5 | 4-5 | 2 | 1 | <1 | - |
| 304 Stainless Steel | <30 | 22-24 | 8-9 | 4-5 | 2-3 | 2-3 | 1-2 | <1 | <1 | - |
| DR02Tool Steel42RC | <40 | 20 | 9-10 | 3-4 | 2-3 | 2-3 | 1-2 | <1 | <1 | - |
| 1018 Steel | <40 | 20-24 | 9-11 | 3-4 | 2-3 | 2-3 | 1-2 | <1 | <1 | - |
| Nylon 90A | <80 | 60-65 | 20-25 | 11-13 | 6-7 | 6-7 | 3 | 2 | 1 | - |

| Roll Material | Max Starting Finish | IMFF 3M272L 60µ | IMFF 3M272L 30µ | IMFF 3M272L 15µ | IMFF 3M272L 9µ | ILF 3M261X 30µ | ILF 3M261X 12µ | ILF 3M261X 9µ | ILF 3M261X 3µ | IPF 3M971X 1µ |
|---|---|---|---|---|---|---|---|---|---|---|
| Rubber 58D100A | 200 | 60-62 | 20-23 | 11-12 | 7-8 | 7-8 | 4-5 | 2 | 1-2 | - |

## Operating Conditions:

| | |
|---|---|
| Abrasive Speed | 1+2 inches / minute |
| Pressure | 40-50 lbs. for IMFF steps |
| | 20-40 lbs. for ILF steps |
| Work Piece Speed | 100-300 sfpm |
| Dwell / Traverse Rate | 50% overlap |
| Roll Pattern | 60A for IMFF |
| | 40A for ILF |
| Oscillation | Alternating full-low |
| Coolant | Water with rust inhibitor |

## Key:

IMFF – Imperial™ Microfinishing Film
ILF– Imperial™ Lapping Film
IPF – Imperial™ Polishing Film

# 66590 Electrical Diagrams

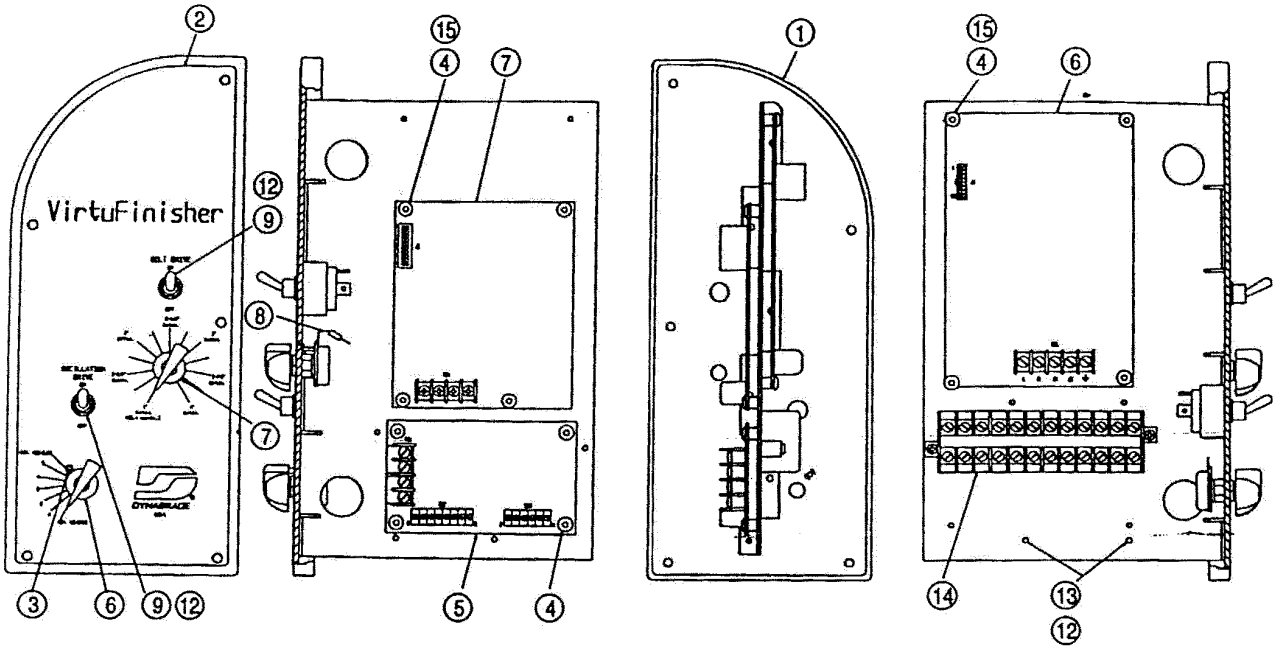


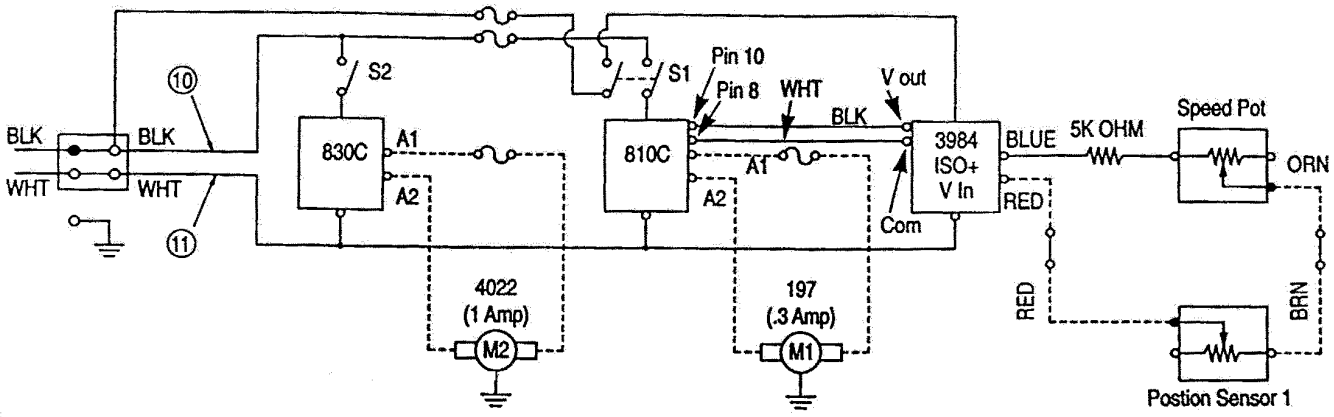


| Index Key | | | |
|---|---|---|---|
| No. | Part | Description | Qty |
| 1 | 66546 | Control Console | 1 |
| 2 | 66550 | Name Plate | 1 |
| 3 | 95216 | Roll Pin | 1 |
| 4 | 95168 | Screw | 12 |
| 5 | 98034 | Interface Card | 1 |
| 6 | 98035 | 830 Control Card and POT | 1 |
| 7 | 98036 | 810 Control Card and POT | 1 |
| 8 | 98039 | Resistor | 1 |
| 9 | 98369 | Switch | 2 |
| 10 | 98405 | Wire-Black | 2 Ft. |
| 11 | 98408 | Wire-White | 2 Ft. |
| 12 | 98611 | Terminal | 9 |
| 13 | 98620 | Screw | 2 |
| 14 | 98800 | Terminal Board | 1 |
| 15 | 98040 | Standoff | 8 |

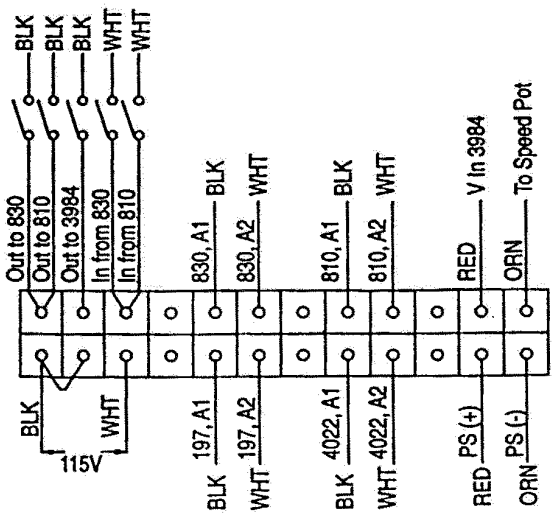

# Abrasive Drive Circuit / Oscillation Drive Circuit

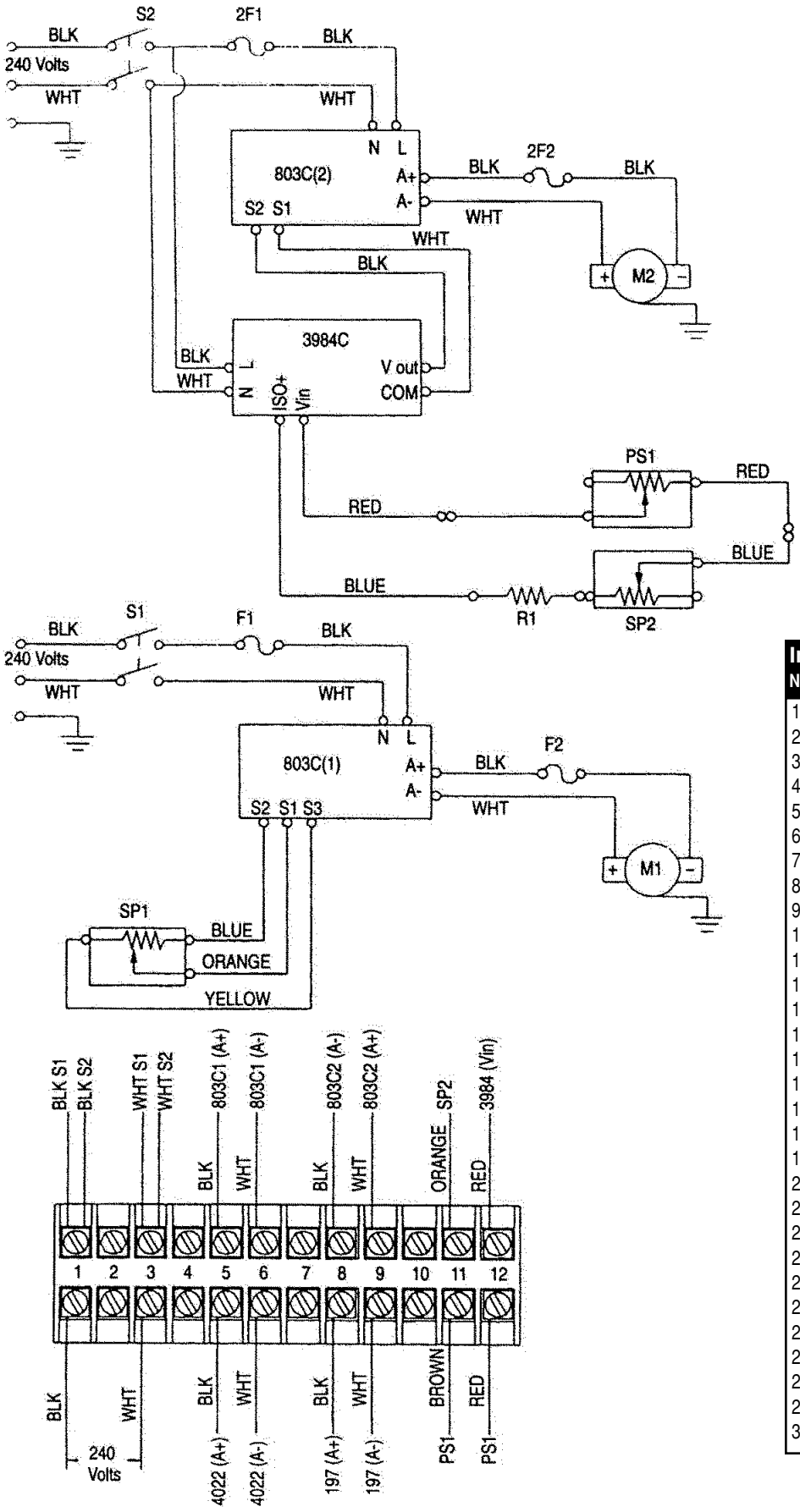


## Index Key

| No. | Part | Description | Qty |
|---|---|---|---|
| 1 | 66546 | Control Console | 1 |
| 2 | 66550 | Name Plate | 1 |
| 3 | 95216 | Roll Pin | 1 |
| 4 | 95178 | SHCS 8-32 x 3/8 | 8 |
| 5 | 98034 | #3984 Interface Card | 1 |
| 6 | 98042 | #803 Motor Control | 2 |
| 7 | 98039 | 5K Ohm - Resistor (R1) | 1 |
| 8 | 98369 | Switch (S1/S2) | 1 |
| 9 | 95168 | SCHS 8-32 x 1/2 | 4 |
| 10 | 98405 | Wire-Black | 2 Ft. |
| 11 | 98408 | Wire-White | 2 Ft. |
| 12 | 98613 | Terminal DNF 14-250C | 13 |
| 13 | 98611 | Terminal T+B#14RB-10 | 8 |
| 14 | 98620 | Screw | 2 |
| 15 | 98800 | Terminal Board | 1 |
| 16 | 98040 | Stand Off | 4 |
| 17 | 98421 | Marker | 1 |
| 18 | 98425 | Marker | 1 |
| 19 | 98806 | Lock Nut | 2 |
| 20 | 98041 | Speed Pot#897 (SP1/SP2) | 2 |
| 21 | 98806 | Lock Nut | 2 |
| 22 | 98043 | Fuse (F1/F2) | 2 |
| 23 | 98044 | Fuse (F2) | 1 |
| 24 | 98045 | Fuse (2F2) | 1 |
| 25 | 98804 | Cord Grip | 1 |
| 26 | 98805 | Cord Grip | 2 |
| 27 | 98037 | Position Sensor | 1 |
| 28 | 98746 | Lock Nut | 1 |
| 29 | 98700 | Cord Gip | 1 |
| 30 | 98751 | Seal Ring | 1 |

## Index Key

| No. | Part | Description | Qty |
|---|---|---|---|
| 1 | **02651** | Bearing | 2 |
| 2 | **65229** | Cord Grip | 1 |
| 3 | 66510 | Retainer | 2 |
| 4 | 66511 | Spool Lock | 8 |
| 5 | 66512 | Bushing | 2 |
| 6 | 66513 | Drive Shaft | 1 |
| 7 | 66514 | Spool Hub | 2 |
| 8 | 66515 | Idler Shaft | 1 |
| 9 | 66516 | Housing | 1 |
| 10 | 66517 | O-Ring | 2 |
| 11 | 66518 | Torque Limiter | 1 |
| 12 | 66519 | Drive Worm | 1 |
| 13 | 66520 | Worm Gear | 1 |
| 14 | 66521 | Oscillation Shaft | 5 |
| 15 | 66522 | Grease Feeder | 1 |
| 16 | 66523 | Grease Manifold | 1 |
| 17 | 66524 | Grease Cartridge | 1 |
| 18 | 66525 | Oscillation Arm | 2 |
| 19 | 66526 | Friction Disc | 1 |
| 20 | 66527 | Shoulder Screw | 2 |
| 21 | 66528 | Roller | 2 |
| 22 | 66529 | Wheel Support | 1 |
| 23 | 66530 | Base | 1 |
| 24 | 66531 | Cylinder Support | 1 |
| 25 | 66532 | Shaft | 1 |
| 26 | 66533 | Wheel Support Mount | 1 |
| 27 | 66534 | Oscillating Plate | 1 |
| 28 | 66535 | Baffle Retainer | 1 |
| 29 | 66536 | Baffle | 1 |
| 30 | 66537 | Retainer Strip, Horizontal | 2 |
| 31 | 66539 | Drive Mount | 1 |
| 33 | 66540 | Front Oscillating Mount | 1 |
| 34 | 66541 | Rear Oscillating Mount | 1 |
| 35 | 66542 | Rear Oscillating Cam | 1 |
| 36 | 66543 | Front Oscillating Cam | 1 |
| 37 | 65590 | Control Console - Electric | 1 |
| 38 | 66554 | Contact Wheel | 1 |
| 39 | 95202 | Set Screw | 6 |
| 40 | 95419 | Knob Assy. | 2 |
| 41 | 95562 | Plug | 1 |
| 42 | 97158 | Screw | 40 |
| 43 | 97236 | Locknut | 2 |
| 44 | 97311 | Washer | 2 |
| 45 | 97316 | Spacer | 4 |
| 46 | 97335 | Spacer | 4 |
| 47 | 97406 | Roll Pin | 4 |
| 48 | 97407 | Spring Pin | 3 |
| 49 | 97460 | Key | 1 |
| 50 | 97466 | Key | 1 |
| 51 | 97526 | Bearing | 4 |
| 52 | 97527 | Washer | 4 |
| 53 | 97530 | Bushing | 2 |
| 54 | 97538 | Bearing | 2 |
| 55 | 97543 | Bearing | 2 |
| 56 | 97551 | Bushing | 5 |
| 57 | 97552 | Retaining Ring | 10 |
| 58 | 97810 | Anchor Connector | 1 |

## Index Key

| No. | Part | Description | Qty |
|---|---|---|---|
| 59 | 97818 | Quad Ring Seal | 4 |
| 60 | 97820 | Regulator | 1 |
| 61 | 97821 | Air Filter | 1 |
| 62 | 97827 | Male Fitting | 5 |
| 63 | 97874 | Clevis Rod | 2 |
| 64 | 97875 | Clevis Pin | 2 |
| 65 | 97889 | Breather Vent | 1 |
| 66 | 97969 | Cylinder | 1 |
| 67 | 97970 | Air Valve | 1 |
| 68 | 97971 | Gauge | 1 |
| 69 | 98804 | Cord Grip | 1 |
| 70 | 98805 | Cord Grip | 2 |
| 71 | 98032 | Oscillation Motor | 1 |
| 72 | 98033 | Drive Motor | 1 |
| 73 | 98037 | Position Sensor | 1 |
| 74 | 98038 | Tracing Roller | 1 |
| 75 | 98418 | Cord | 1 |
| 76 | 97825 | Male Fitting | 1 |
| 77 | 97826 | Male Fitting | 1 |
| 78 | 97828 | Male Fitting | 1 |
| 79 | 97829 | Tubing | 1 |
| 80 | 95078 | Close Nipple | 1 |
| 81 | 97083 | Cap Screw | 7 |
| 82 | 66591 | Contact Wheel Shaft | 1 |
| 83 | 66592 | Cover | 1 |
| 84 | 66593 | Coolant Nozzle Support | 1 |
| 85 | 66548 | Belt Guide | 1 |
| 86 | 97772 | Spring Clip | 3 |
| 87 | 97733 | Knob | 3 |
| 88 | 9738 | Shoulder Screw | 3 |
| 89 | 97155 | Screw | 5 |
| 90 | 97897 | Adjustment Coolant Hose | 1 |
| 91 | 11054 | Shaft | 2 |
| 92 | 50976 | Jamb Nut | 1 |
| 93 | 65059 | Name Plate | 1 |
| 94 | 65217 | Bushing | 1 |
| 95 | 66084 | Logo | 1 |
| 96 | 66569 | Wheel Support | 1 |
| 97 | 95018 | Screw | 4 |
| 98 | 95084 | Bushing | 1 |
| 99 | 95178 | Screw | 3 |
| 100 | 95210 | Screw | 4 |
| 101 | 95221 | Screw | 4 |
| 102 | 95760 | Coupler | 1 |
| 103 | 95760 | Valve | 1 |
| 104 | 97001 | Screw | 4 |
| 105 | 97022 | Screw | 7 |
| 106 | 97041 | Screw | 2 |
| 107 | 97058 | Screw | 4 |
| 108 | 97086 | Screw | 2 |
| 109 | 97401 | Metal Track Fastener | 8 |
| 110 | 98806 | Lock Nut | 3 |
| 111 | 66594 | Control Strip | 1 |
| 112 | 98421 | Electric Marker | 1 |
| 113 | 98425 | Electric Marker | |

# VirtuFinisher

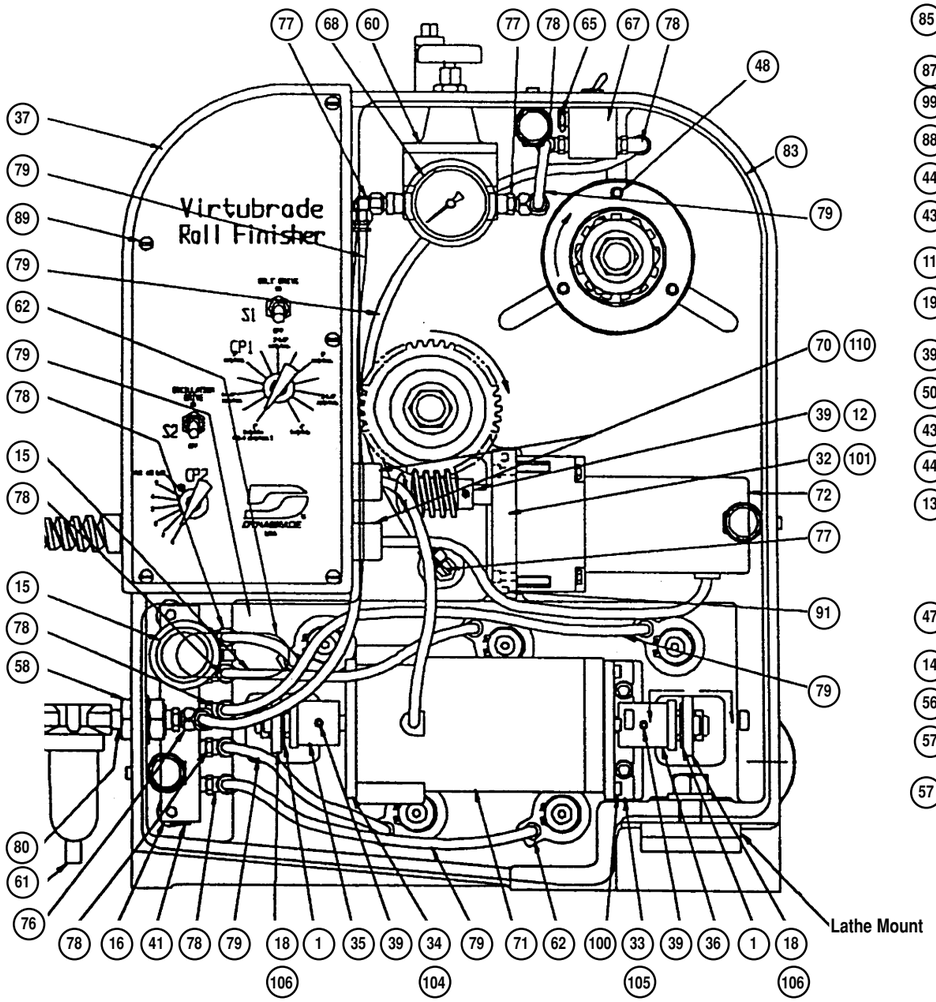


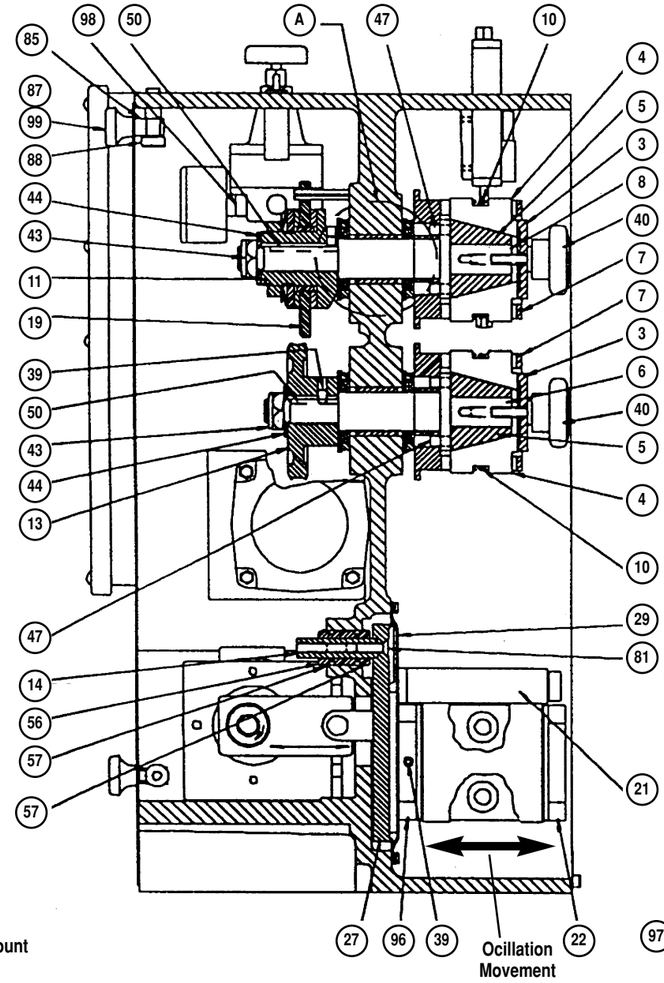


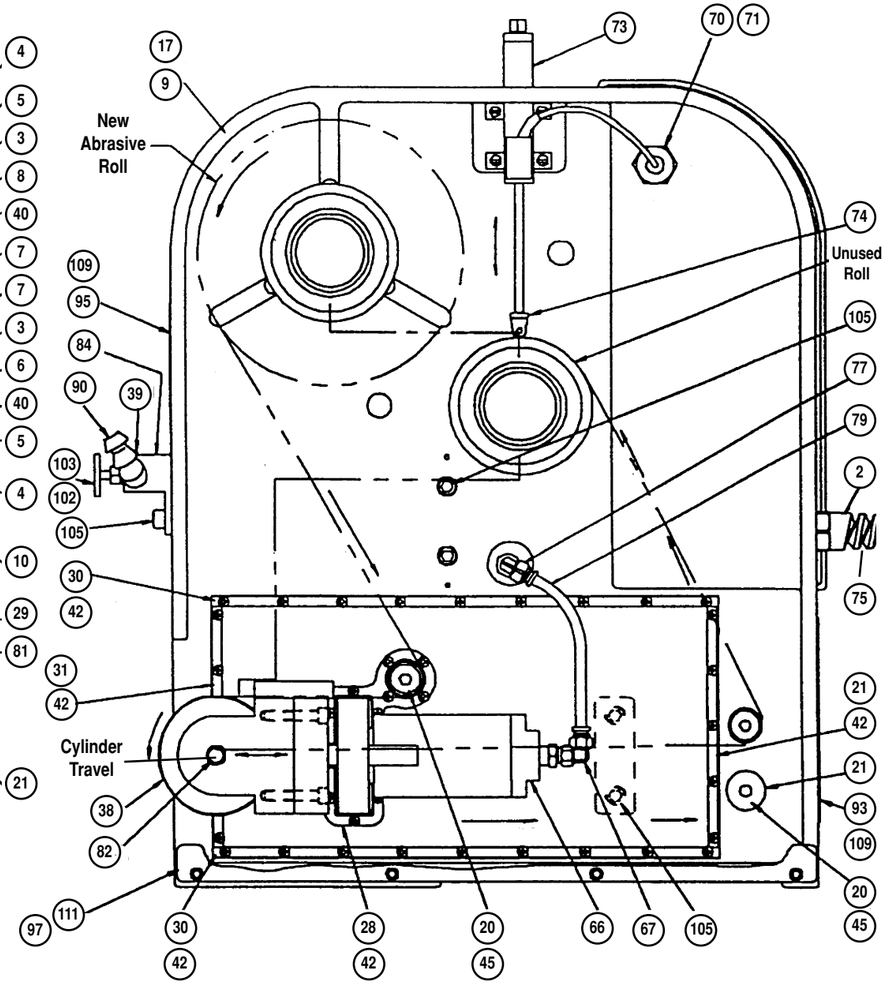


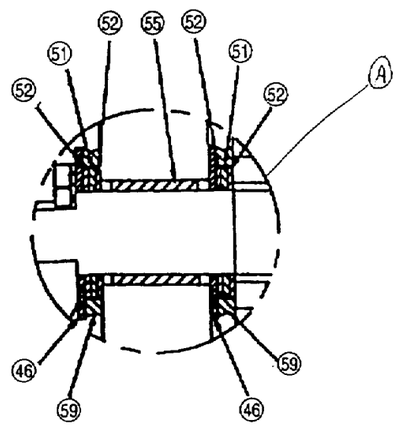

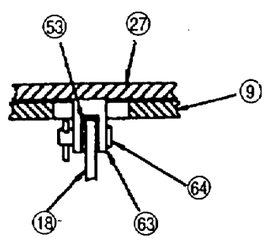

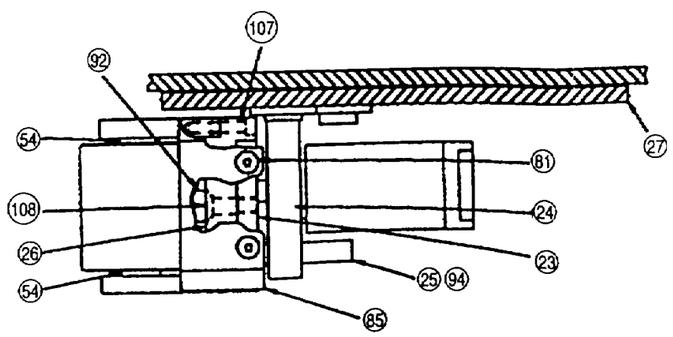

# Important Operating, Maintenance and Safety Instructions

**Carefully read all instructions before operating or servicing any Dynabrade® Abrasive Power Tool.**
**Warning:** Hand, wrist and arm injury may result from repetitive work motion and overexposure to vibration.
**Important:** All Dynabrade air tools must be used with a Filter-Regulator-Lubricator to maintain all warranties.

## Operating Instructions:

**Warning:** Eye, face and body protection must be worn while operating power tools. Failure to do so may result in serious injury or death. Follow safety procedures posted in workplace.

1. With power source disconnected from tool, securely fasten tool to the lathe (see Mounting and Machine Adjustment Instructions, page 3).
2. Install abrasive belt on tool (see Abrasive Belt Change/Installation Instructions, page 3).
3. Operate machine for 30 seconds prior to application to work piece to determine if machine is working properly and safely before work begins.

## Maintenance Instructions:

**Products offered by Dynabrade should not be converted or otherwise altered from original design without expressed written consent from Dynabrade, Inc.**

Dynabrade's Virtufinisher is virtually maintenance free. To maintain unit in this condition, please thoroughly clean all surfaces after each usage. An automatic grease feeder (#15) keeps the oscillation components lubricated at all times. This feeder will need to be periodically refilled. Use only lithium based
grease as provided (P/N 66524). Drive worm and gear (#12, #13) should be periodically lubricated as well.

## Safety Instructions:

- **Important:** User of tool is responsible for following accepted safety codes such as those published by the American National Standards Institute (ANSI).
- Always disconnect power supply before changing abrasive/accessory or making machine adjustments.
- Inspect abrasives/accessories for damage or defects prior to installation on tools.
- Please refer to Dynabrade's Warning/Safety Operating Instructions Tag (Reorder No. **95903**) for more complete safety information.
- Never use an abrasive belt that is narrower than the contact wheel. The uncovered wheel face can cause snagging of workpiece and also cause premature wear o contact wheel.
- Always use an upward stroke of the workpiece against the abrasive belt and use the grind area below the center line of the contact wheel.

**Warning:** There is a potential combustion hazard if ferrous and non-ferrous grinding dust is mixed Do not grind materials of different types without thoroughly cleaning grinding residue from inside the machine.

## Notice

All Dynabrade motors use the highest quality parts and metals available and are machined to exacting tolerances. The failure of quality pneumatic motors can most often be traced to an unclean air supply or the lack of lubrication. Air pressure easily forces dirt or water contained in the air supply into motor bearings causing early failure. It often scores the cylinder walls and the rotor blades resulting in limited efficiency and power. Our warranty obligation is contingent upon proper use of our tools and cannot apply to equipment which has been subjected to misuse such as unclean air, wet air or a lack of lubrication during the use of this tool.

## One Year Warranty

Following the reasonable assumption that any inherent defect which might prevail in a product will become apparent to the user within one year from the date of purchase, all equipment of our manufacture is warranted against defects in workmanship and materials under normal use and service. We shall repair or replace at our factory, any equipment or part thereof which shall, within one year after delivery to the original purchaser, indicate upon our examination to have been defective. Our obligation is contingent upon proper use of Dynabrade tools in accordance with factory recommendations, instructions and safety practices. It shall not apply to equipment which has been subject to misuse, negligence, accident or tampering in any way so as to affect its normal performance. Normally wearable parts such as bearings, contact wheels, rotor blades, etc., are not covered under this warranty.

| Machine Description | Length Inch (mm) | Width Inch (mm) | Height Inch ( mm) | Weight Pound ( kg) | Abrasive Roll Size Inches (mm) x Feet | Electrical Volts/PH/Hz | Inlet Thread | Abrasive Advance Inches(mm) per minute |
|---|---|---|---|---|---|---|---|---|
| **66501** | 16" (406) | 12" (305) | 20" (508) | 80 lbs. (36) | *3" (76)W x 150' (46)L | 240 / 1 / 150 | 1/4" NPT | 1"-4" (25-102) |

Air Pressure Required: 60 PSI (4.1Bars) *150' (7" diameter maximum) on 3" diameter keyed cores. Order with abrasive side "out".

**Visit our new Web Site** at http://www.dynabrade.com

DYNABRADE®

***DYNABRADE, INC.,*** 8989 Sheridan Drive • Clarence, NY 14031-1490 • Phone: (716) 631-0100 • Fax: 716-631-2073 • International Fax: 716-631-2524
***DYNABRADE EUROPE S.àr.l.,*** Zone Artisanale • L-5485 Wormeldange—Haut, Luxembourg • Telephone: 352 76 84 94 • Fax: 352 76 84 95
©DYNABRADE, INC., 1999
PRINTED IN USA