The following safety rules apply when contact wheel grinding:

1. Never use an abrasive belt that is narrower than the contact wheel, as the uncovered wheel face will cause snagging of the workpiece.
2. Always use an upward stroke of the workpiece against the abrasive belt and always use the grind area below the centerline of the contact wheel.

⚠WARNING There is a potential combustion hazard if ferrous and non-ferrous grinding dust is mixed. Do not grind materials of different types without thoroughly cleaning grinding residue from inside machine.

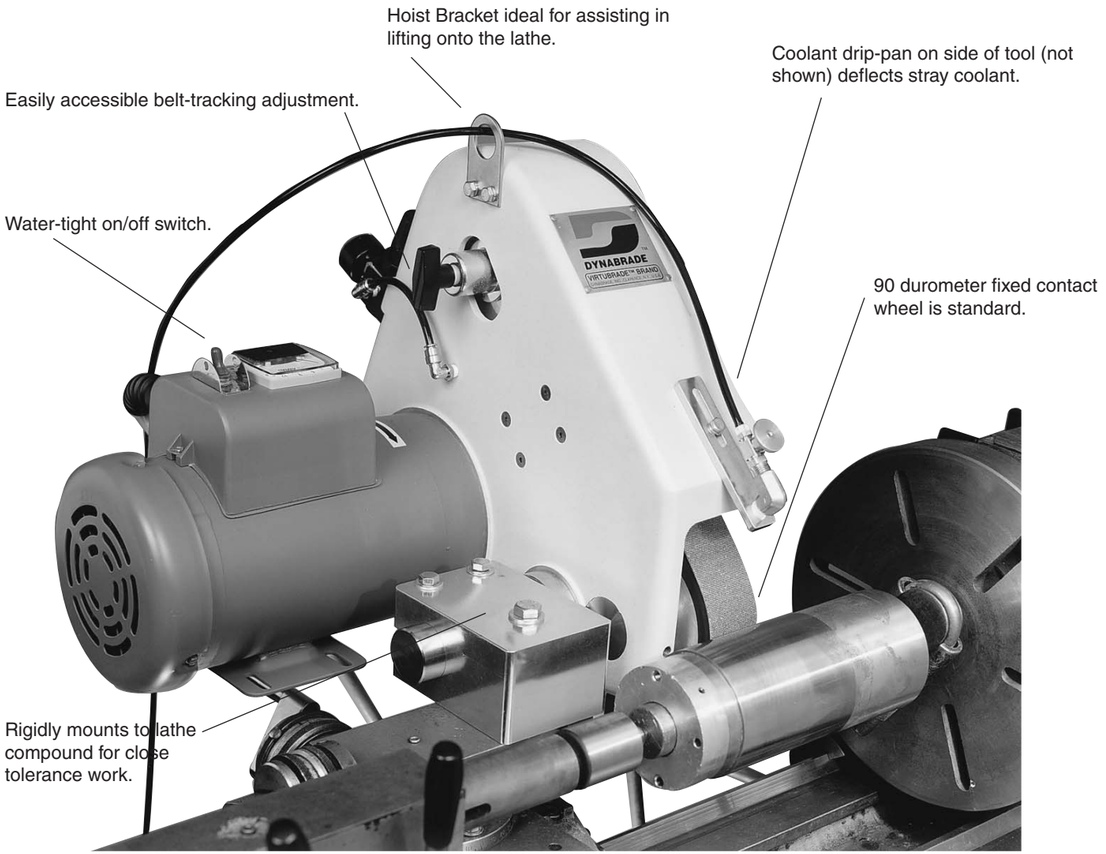

Parts Page Reorder No. PD97•46
Effective July, 1997

Precision Tool Post Grinder Instruction Manual

Models:
64990 – 3,450 RPM (Dry), 60 Hz
64992 – 2,850 RPM (Dry), 50 Hz

Abrasive Belt Machine

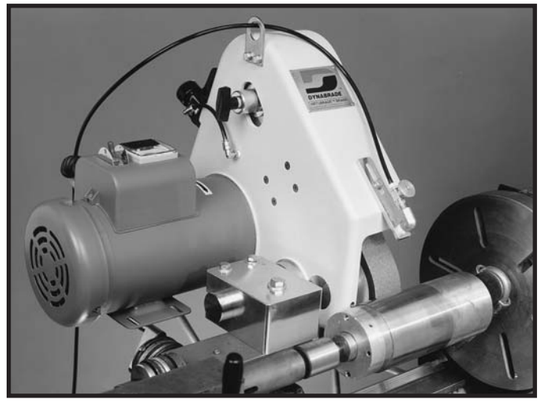

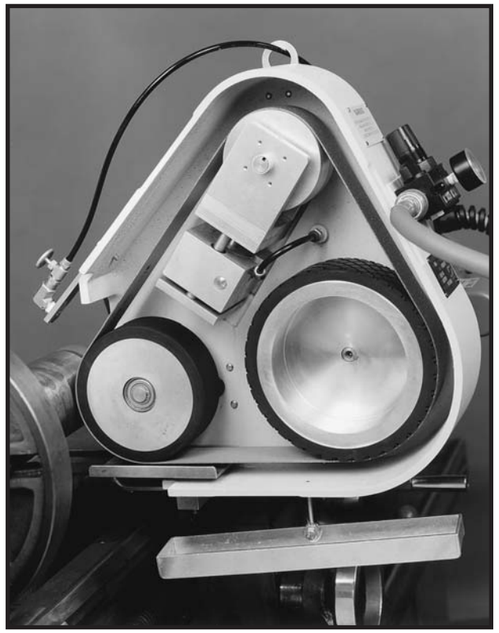



DYNABRADE®

Visit our new Web Site via Industry.Net MROP On-Line: http://www.dynabrade.industry.net **E-Mail:** DynaTalk@aol.com

DYNABRADE, INC., 8989 Sheridan Drive • Clarence, NY 14031-1490 • Phone: (716) 631-0100 • Fax: 716-631-2073 • International Fax: 716-631-2524
DYNABRADE EUROPE S.àr.l., Zone Artisanale • L-5485 Wormeldange—Haut, Luxembourg • Telephone: 352 76 84 94 • Fax: 352 76 84 95

©DYNABRADE, INC., 1997

PRINTED IN USA

DYNABRADE®

Warranty

Following the reasonable assumption that any inherent defect which might prevail in a product will become apparent to the user within one year from the date of purchase, all equipment of our manufacture is warranted against defects in workmanship and materials under normal use and service. We shall repair or replace at our factory, any equipment or part thereof which shall, within one year after delivery to the original purchaser, indicate upon our examination to have been defective.

Our obligation is contingent upon proper use of Dynabrade tools in accordance with factory recommendations, instructions and safety practices. It shall not apply to equipment which has been subject to misuse, negligence, accident or tampering in any way so as to affect its normal performance.

Normally wearable parts such as bearings, contact wheels, rotor blades, etc., are not covered under this warranty.

Electrical Warning

Warning: This tool does "not" come equipped with overcurrent protection. It is the user's responsibility to provide an adequately grounded circuit with correctly rated fuse or circuit breaker. A "ground-fault" protected device is also recommended if tool is to be operated "wet".

Refer to **Electrical Schematic ES-65014** for machine wiring. A qualified electrician can determine if the tool (as shipped) and the supply circuitry is in accordance with local electrical codes and ordinances.

The machine "as shipped" is intended to be used exclusively on a 230-volt, Single Phase power supply.

Always disconnect tool from power at plug before performing any maintenance tasks.

Electrical Schematic ES-65014

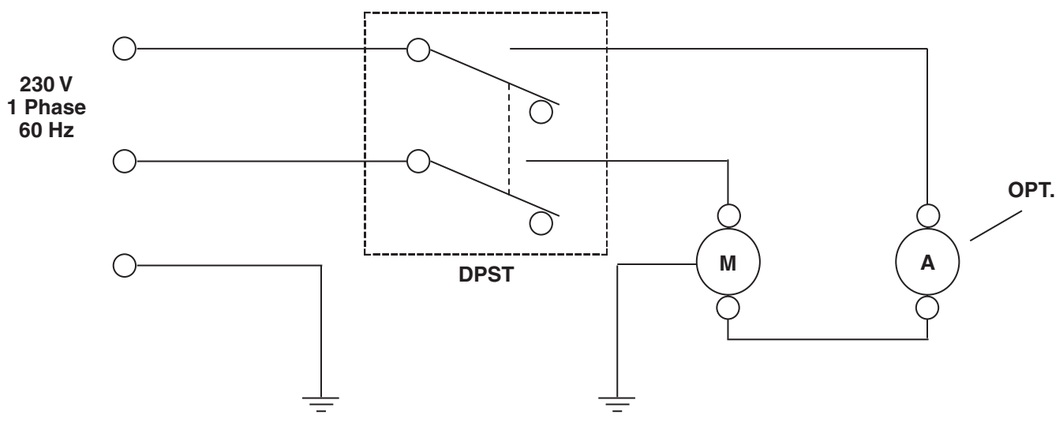

Nema Configuration
Locking Type Plug

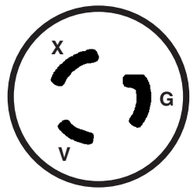

L6 – 2OP

Electrical Safety Instructions

Warning: When using electric tools, basic safety precautions should always be followed to reduce the risk of a fire, electric shock, and personal injury, including the following:

1. **Keep work area clean.** Cluttered areas and benches invite accidents.
2. **Consider work area environment.** Keep work area well lit. Do not use tools in the presence of flammable liquids or gases.
3. **Guard against electric shock.** Prevent body contact with grounded surfaces. For example; pipes, radiators, ranges, refrigerator enclosures.
4. **Keep children away**. Do not let visitors contact tool or extension cord. All visitors should be kept away from work area.
5. **Do not force tool.** It will do the job better and safer at the rate for which it was intended.
6. **Use the right tool.** Do not force a small tool or attachment to do the job of a heavy duty tool. Do not use tool for purposes not intended.
7. **Dress properly.** Do not wear loose fitting clothing or jewelry. They can be caught in moving parts. Rubber gloves and non-skid footwear are recommended when working outdoors. Wear protective hair covering to contain long hair.
8. **Use safety glasses.** Also use face-shield or dust mask if operation area is dusty.
9. **Do not abuse cord.** Never carry tool by cord or yank it to disconnect from receptacle. Keep cord from heat, oil and sharp edges.
10. **Secure work.** Use clamps or a vice to hold workpiece. It's safer than using your hand and it frees up both hands to operate tool.
11. **Do not overreach.** Keep proper footing and balance at all times.
12. **Maintain tools with care.** Keep tools clean for better use and safer performance. Follow instructions for lubricating and changing accessories. Inspect tool cords periodically and if damaged, have repaired by authorized service facility. Inspect extension cords periodically and replace if damaged. Keep handles dry, clean and free from oil and grease.
13. **Do not leave tool running**. Disconnect tools when not in use, before servicing, when changing belts, contact arms, etc.
14. **Remove keys and wrenches.** Form a habit of checking to see that all keys and adjusting wrenches are removed from tool before turning it on.
15. **Avoid accidental starting.** Do not carry around plugged in tool with finger on switch. Be sure switch is off when plugging in.
16. **Out-door use extension cords**. When tool is used outdoors, use only extension cord suitable for outdoor use. They should be marked with the suffix W-A (for UL) or W (for CSA in Canada).
17. **Stay alert**. Watch what you are doing. Use common sense. Do not operate tool when you are tired.
18. **Check damaged parts**. Before further use of the tool, a guard or other part that is damaged should be carefully checked to determine that it will operate properly and perform its intended function. Check for alignment of moving parts, breakage of moving parts, binding of moving parts, mounting and any other conditions that may affect its operation. A guard or other part that is damaged should be properly repaired or replaced by an authorized service center unless otherwise indicated elsewhere in this instruction manual. Have defective switches replaced. Do not use tool if switch does not turn tool on or off.
19. **Avoid gaseous areas.** Do not operate portable electric tools in gaseous or explosive atmospheres. Motors in these tools normally spark, and the sparks can ignite fumes.
20. **Do not alter or misuse tool.** This tool is precision built. Any alteration or modification not specified is misuse and may result in a dangerous condition. Only these accessories and attachments that are found in this instruction manual are acceptable for use with this tool. The use of any other accessory or attachment might present a risk to the operator.
21. **Replacement parts.** When servicing, use only identical replacement parts. When ordering replacement parts, please specify model and serial numbers of your machine.

Voltage Warning

Before connecting the tool to a power source (receptacle, outlet, etc.) be sure the voltage supplied is the same as what is specified on the nameplate of the tool. A power source with greater than that specified for tool can result in **serious injury** to the user as well as damage to the tool. Using a power source with voltage less than the nameplate rating is harmful to the tool's motor. If in doubt, **do not plug in the tool.**

Machine Adjustments

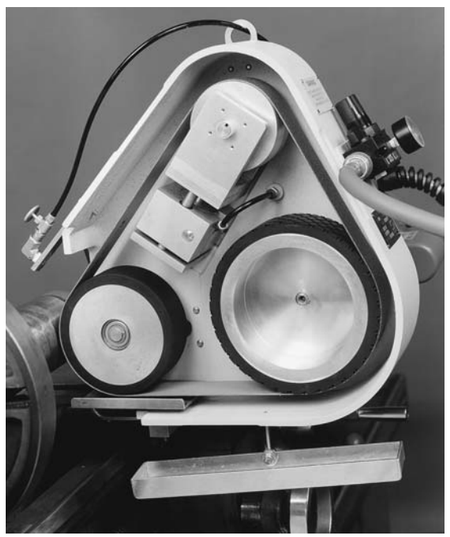

Belt Change/Installation:

1. Remove Belt Guard by grasping door latch (P/N 97760) and rotate 1/4 turn counter-clockwise.
2. Turn off air supply at valve (item #42). This will retract air cylinder (item #35) and thus removes tension from the belt.
3. Remove and replace belt.
4. **Important:** With hands clear from moving parts, turn air supply back on at item #42. Regulator pressure should be set to 90 PSI for proper belt tensioning.
5. "Jog" motor by turning on momentarily to ensure proper belt tracking. Tracking procedure is described below.

Replace belt guard and turn door latch 1/4 turn clockwise until "click" is heard.

Belt Tracking:

Belt tracking is accomplished by turning the tracking knob (P/N 95314). Turning clockwise moves belt to the right. Turning counter-clockwise moves belt to the left.

Coolant Nozzle:

The coolant nozzle can be extended or retracted (if dia. allows) for good placement of coolant flow by loosening hex screw (P/N 95179). Retighten once placement is achieved. The coolant nozzle has an adjustable flow valve which connects to 1/4" diameter flexible nylon tubing.

Drip Pan:

The drip pan is hinged on a #10 eye screw and can be tilted fore and aft to direct coolant toward lathe bed.

Catch Tray Assembly:

Each machine comes equipped with an adjustable catch tray which positions underneath the contact wheel. Its purpose is to collect the major portion of grind dust/swarf and direct it away from the lathe ways. It should be placed within 1/8" of workpiece. Position can be changed by loosening knob (P/N 97773). When grinding into a shoulder, it will be necessary to remove tray entirely.

Maintenance

The grinders described in this manual have been designed to be maintenance-free. All bearings and moving parts are sealed/shielded and lubricated for life. Electric motor maintenance should be performed as recommended by the motor manufacturer.

Good housekeeping is essential to insuring long life of any machine tool. By keeping the machine clean and visually inspected for any wear, the machine will provide many years of quality service.

Periodically inspect the contact wheels, idler rolls and drive pulley for any signs of wear. Repairing or replacing worn parts early enough will prevent other parts from becoming damaged.

Mounting Instructions

This machine comes with a "T"-nut and hex head screw for mounting directly to the lathe compound. Due to the many lathe types, it may be necessary to alter or replace the "T"-nut with one of the correct size for the particular lathe.

"T"-nut dimensions are supplied as follows...

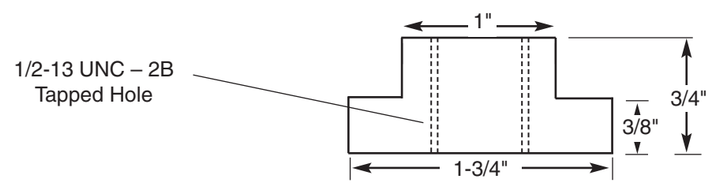

Mat'l 303-SS

MOUNTING:

STEP 1. - Remove any tooling, tooling holders, etc. from the lathe compound.

STEP 2. - Clear all chips and debris from the top of compound and "T"-slot.

STEP 3. - Providing the "T"-nut is of correct size for the lathe compound, lift (or hoist) the entire tool into position. Align and insert "T"-nut into slot.

STEP 4. - Using your fingers, lightly snug the hex screw (P/N 97087) until the tool becomes parallel to the workpiece centerline.

STEP 5. - The tool can now be swung from side to side and positioned for the desired angle between the contact wheel and the workpiece. Once this is achieved, firmly tighten hex screw (P/N 97087).

STEP 6. - Position the contact wheel at or above the workpiece centerline. This will ensure proper belt tracking and prevent chatter from occurring. The position can be altered by loosening the two cap screws (P/N 97088) and allowing the tool to pivot on the pivot shaft (P/N 65266) **(tool must be supported while performing this task!)** Firmly retighten the screws once proper positioning is achieved.

The machine is now ready for operation.

Machine Specifications

Machine Model No.	Width Inch (mm)	Length Inch (mm)	Height Inch (mm)	Machine Weight (kg)	Abrasive Belt Size	Electrical	Motor RPM	SFPM
64990	17" (432)	19" (483)	18" (457)	108 lbs. (49)	2"(50) x 48"(1219)	240 V/ 1 Ph/60 Hz	3,450	7,200 (2,187)
64992	17" (432)	19" (483)	18" (457)	108 lbs. (49)	2"(50) x 48"(1219)	240 V/ 1 Ph/50 Hz	2,850	6,000 (1,822)

Precision Tool Post Grinder – Machine Parts Breakdown – Models 64990 and 64992

64990–3,450 RPM, 60Hz
64992–2,850 RPM, 50Hz

Item	Part No.	Description	Qty.
1	65271	Housing	1
2	65335	Electric Assembly (50 Hz)	1
	65349	Electric Assembly (60 Hz)	1
3	98377	Ammeter	1
4	98369	Switch	1
5	98370	Switch Guard	1
6	65195	Mounting Block	1
7	98493	T-Nut	1
8	65266	Pivot Bar	1
9	14333	Lift Bracket	1
10	66616	Tension Block	1
11	95696	Gauge	1
12	65238	Drive Wheel (3,450 RPM)	1
	65306	Drive Wheel (2,850 RPM)	1
13	65233	Contact Wheel Shaft	1
14	97026	Screw	2
15	97502	Ball Bearings	2
16	97436	Retaining Ring	1
21	65268	Cover	1
22	97760	Door Latch	1
23	97053	Screw	2
25	95167	Lock Washer	2
26	97088	Hex Screw	2
27	95183	Flat Washer	2
28	97057	Cap Screw	4
29	97059	Cap Screw	3
30	97087	Hex Screw	1
31	97310	Flat Washer	1
32	97085	Flathead Screw	4
33	97460	Key	1
34	97069	Carriage Bolt	1
35	97806	Air Cylinder	1
36	97112	Set Screw	1
37	97828	Fitting Elbow	2
38	97829	Hose	2 Ft.
39	97083	Flathead Screw	4
40	65232	Tension Strap	1
41	97894-B	Valve	1
42	97894-C	Regulator	1
43	97812	Oil Seal	4
44	65217	Bushing	4
45	65338	Contact Wheel	1
46	65267	Tension Shaft	2
47	97058	Cap Screw	4
48	65269	Tension Support	1
49	95202	Set Screw	1
50	97556	Bushing	2
51	97405	Roll Pin	1
52	65075	Idler Support	2
53	65236	Tracking Wheel (3,450 RPM)	1
	65307	Tracking Wheel (2,850 RPM)	1
54	97518	Ball Bearing	2
55	97441	Retaining Ring	2
56	65130	Tracking Shaft	1
57	65132	Tracking Hub	1
58	97152	Low Head Screw	4
59	95417	Nylon Washer	2
60	95186	Hex Nut	1
61	95314	Knob	1
71	97086	Flathead Screw	1

