Parts Page Reorder No. PD97•33
Effective May, 1997
Supersedes PD96•10

Dynabelter® Accu-Grinder®

Model: 11450

2" Wide Abrasive Belt Capacity, Extra Heavy Duty

⚠WARNING **Always operate, inspect and maintain this tool in accordance with the Safety Code for portable air tools (ANSI B186.1) and any other applicable safety codes and regulations. Please refer to Dynabrade's Warning/Safety Operating Instructions for more complete safety information.**

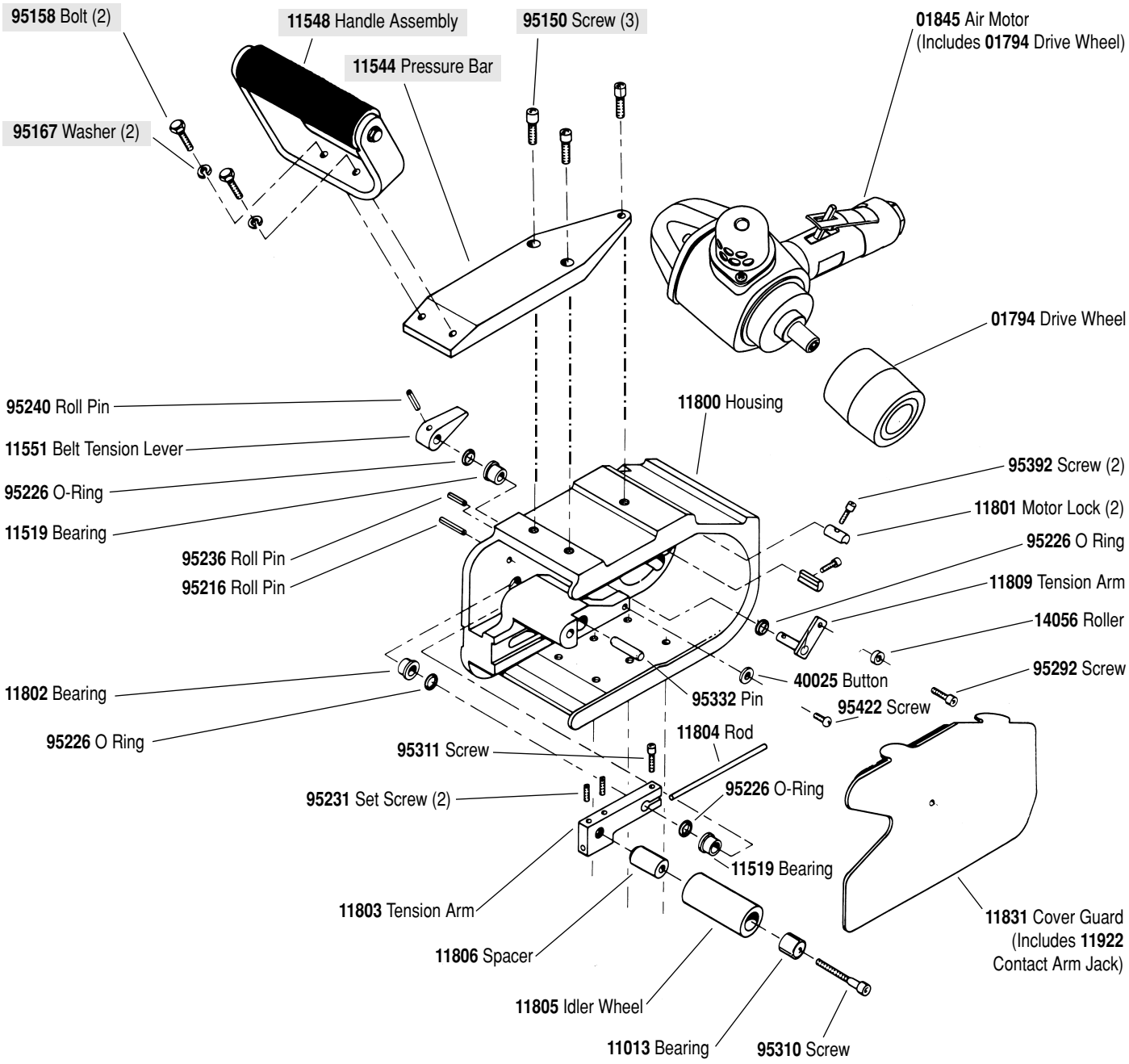

11705 Pressure Bar Assembly

See Page 2 for **11961** Adjust-a-Wheel Contact Wheel Assembly and **11917** Rear Wheel Support.
See Page 3 for Important Operating, Safety and Maintenance Instructions before operating tool.

11961 Adjust-A-Wheel Contact Arm Assembly

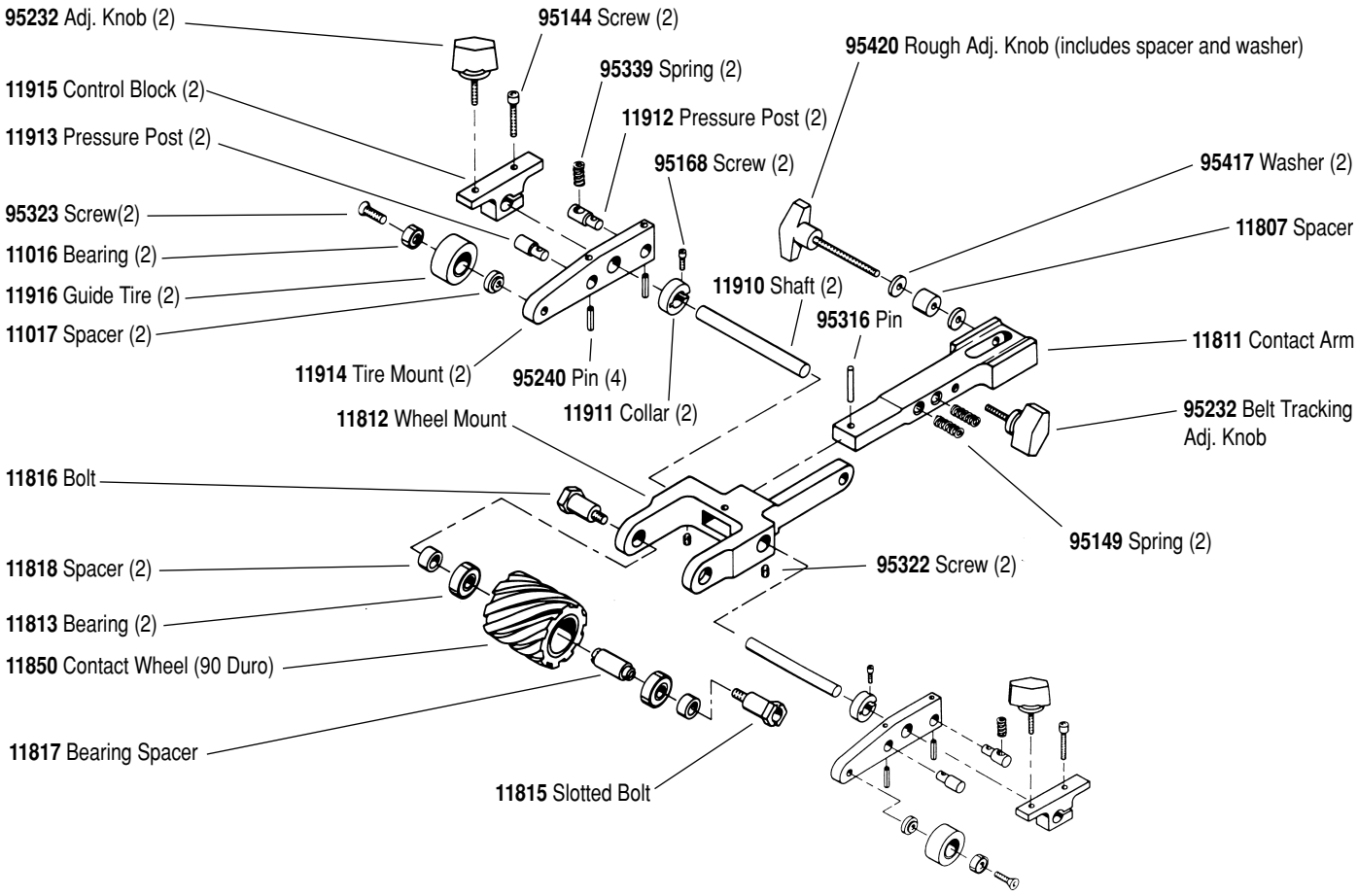

11917 Rear Wheel Support Assembly

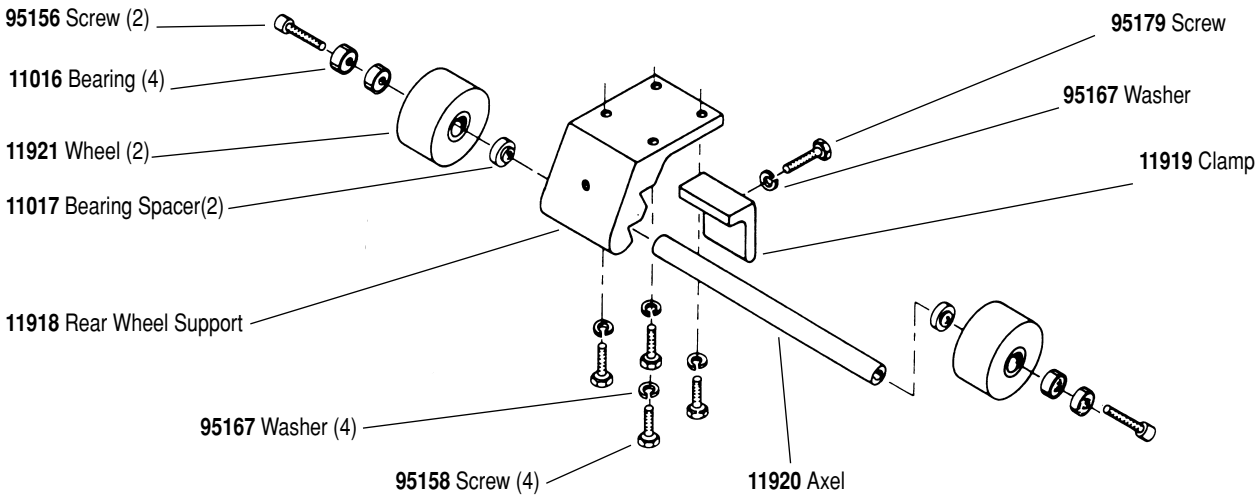

Important Operating, Maintenance and Safety Instructions

Carefully read all instructions before operating or servicing any Dynabrade® Abrasive Power Tool.
Warning: Hand, wrist and arm injury may result from repetitive work motion and overexposure to vibration.
Important: All Dynabrade air tools must be used with a Filter-Regulator-Lubricator to maintain all warranties.

Operating Instructions:

Warning: Eye, face and body protection must be worn while operating power tools. Failure to do so may result in serious injury or death. Follow safety procedures posted in workplace.

1. With power source disconnected from tool, securely fasten abrasive/accessory on tool.
2. Install air fitting into inlet bushing of tool. **Important:** Secure inlet bushing of tool with a wrench before attempting to install the air fitting to avoid damaging valve body housing.
3. Connect power source to tool. Be careful not to depress throttle lever in the process.
4. Check tool speed with tachometer. If tool is operating at a higher speed than the RPM marked on the tool or operating improperly, the tool should be serviced to correct the cause before use.

Maintenance Instructions:

1. Check tool speed regularly with a tachometer. If tool is operating at a higher speed than the RPM marked on the tool, the tool should be serviced to correct the cause before use.
2. Some silencers on air tools may clog with use. Clean and replace as required.
3. All Dynabrade air motors should be lubricated. Dynabrade recommends one drop of air lube per minute for each 10 SCFM (example : if the tool specification state 40 SCFM, set the drip rate of your filter-lubricator at 4 drops per minute). Dynabrade Air Lube (P/N **95842**: 1pt. 473ml.) is recommended.
4. An air line filter-regulator-lubricator must be used with this air tool to maintain all warranties. Dynabrade recommends the following: **11299** Air Line Filter-Regulator-Lubricator — Provides accurate air pressure regulation, two-stage filtration of water contaminants and micro-mist lubrication of pneumatic components. Operates 100 CFM @ 100 PSI has 1/2" NPT female ports.
5. Use only genuine Dynabrade replacement parts. To reorder replacement parts, specify the **Model #**, **Serial #**, and **RPM** of your machine.
6. A motor tune-up kit (P/N **96259**) is available which includes assorted parts to help maintain motor in peek operating condition.
7. Mineral spirits are recommended when cleaning the tool and parts. Do not clean tool or parts with any solvents or oils containing acids, esters, keytones, chlorinated hydrocarbons or nitro carbons.

Safety Instructions:

Products offered by Dynabrade should not be converted or otherwise altered from original design without expressed written consent from Dynabrade, Inc.

- **Important:** User of tool is responsible for following accepted safety codes such as those published by the American National Standards Institute (ANSI).
- Operate machine for one minute before application to workpiece to determine if machine is working properly and safely before work begins.
- Always disconnect power supply before changing abrasive/accessory or making machine adjustments.
- Inspect abrasives/accessories for damage or defects prior to installation on tools.
- Please refer to Dynabrade's Warning/Safety Operating Instructions Tag (Reorder No. **95903**) for more complete safety information.
- **Warning:** Hand, wrist and arm injury may result from repetitive work, motion and overexposure to vibration.

Notice

All Dynabrade motors use the highest quality parts and metals available and are machined to exacting tolerances. The failure of quality pneumatic motors can most often be traced to an unclean air supply or the lack of lubrication. Air pressure easily forces dirt or water contained in the air supply into motor bearings causing early failure. It often scores the cylinder walls and the rotor blades resulting in limited efficiency and power. Our warranty obligation is contingent upon proper use of our tools and cannot apply to equipment which has been subjected to misuse such as unclean air, wet air or a lack of lubrication during the use of this tool.

One Year Warranty

Following the reasonable assumption that any inherent defect which might prevail in a product will become apparent to the user within one year from the date of purchase, all equipment of our manufacture is warranted against defects in workmanship and materials under normal use and service. We shall repair or replace at our factory, any equipment or part thereof which shall, within one year after delivery to the original purchaser, indicate upon our examination to have been defective. Our obligation is contingent upon proper use of Dynabrade tools in accordance with factory recommendations, instructions and safety practices. It shall not apply to equipment which has been subject to misuse, negligence, accident or tampering in any way so as to affect its normal performance. Normally wearable parts such as bearings, sanding pads, rotor blades, etc., are not covered under this warranty.

Machine Number	Length Inch (mm)	Height Inch (mm)	Weight Pound (kg)	Abrasive Belt Size Inch (mm)	Air Flow Rate SCFM (LPM)	Sound Level	Motor HP (W)	Motor RPM	Air Pressure PSI (Bars)
11450	20" (508)	9" (229)	18 lbs. (8.2)	2" (51) W x 30" (762) L	57 (1,614)	87 dBA	2.0 (1,491)	7,200	90 (6.2)

Additional specifications: Air Inlet Thread 1/2" (13 mm) NPT • Hose Size 1/2" (13 mm)

Abrasive Belt/Contact Arm Change Instructions:

To Change Belt:

1. Disconnect power source. Remove **11831** Cover Guard and release **11551** Belt Tension Lever.
2. Loosen **95420** Rough Adjustment Knob. This will loosen contact arm assembly in housing track. Remove belt from contact arm and drive wheel.
3. Pull belt backwards and to the left until belt is released from drive wheel.
4. Install new belt by placing belt over contact wheel and drive wheel.
5. Using **11922** Tension Wrench, push contact arm forward until belt is tight. Tighten **95420** Knob to lock contact arm in place.
6. Reset **11551** Belt Tension Lever. Replace **11831** Cover Guard.
7. Connect power source and start motor.
8. Adjust belt tracking by turning **95232** Belt Tracking Knob on contact arm assembly to the left or right accordingly.

To Change Belt Contact Arm Assembly:

1. Disconnect power source. Remove **11831** Cover Guard.
2. Remove abrasive belt (see instructions).
3. Remove **95420** Rough Adjustment Knob.
4. Remove contact arm and replace with desired contact arm.
5. Replace **95420** Knob. Do not tighten knob at this point.
6. Replace abrasive belt (see instructions).
7. Using **11922** Tension Wrench, push contact arm assembly forward until the belt is tight. Tighten **95420** Knob and reset **11551** Belt Tension Lever.
8. Replace **11831** Cover Guard. Connect power source and start motor.
9. Adjust belt tracking by turning **95232** Belt Tracking Knob on contact arm assembly to the left or right accordingly.

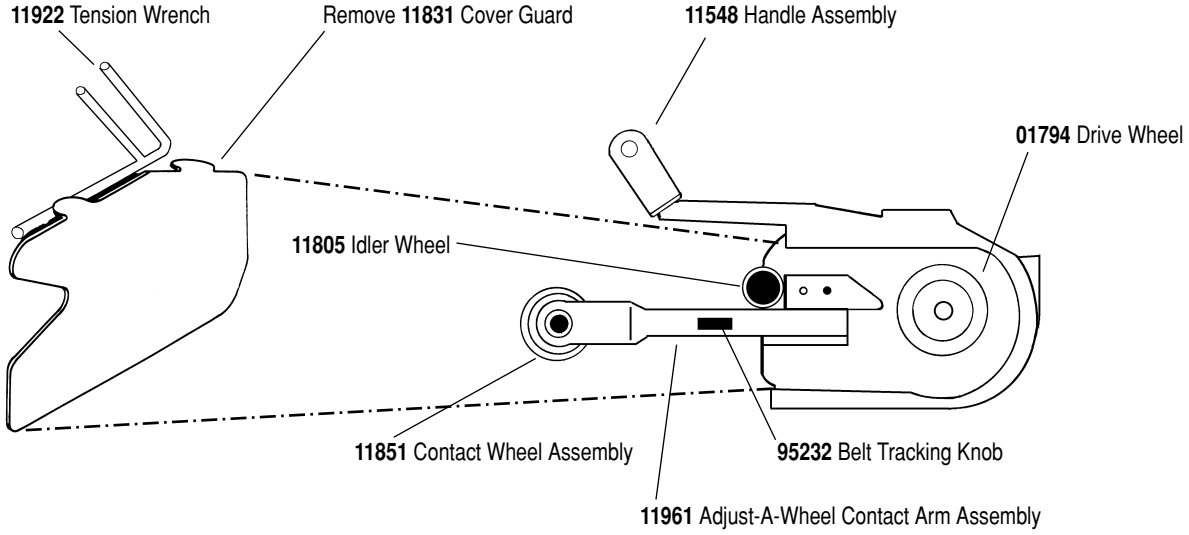

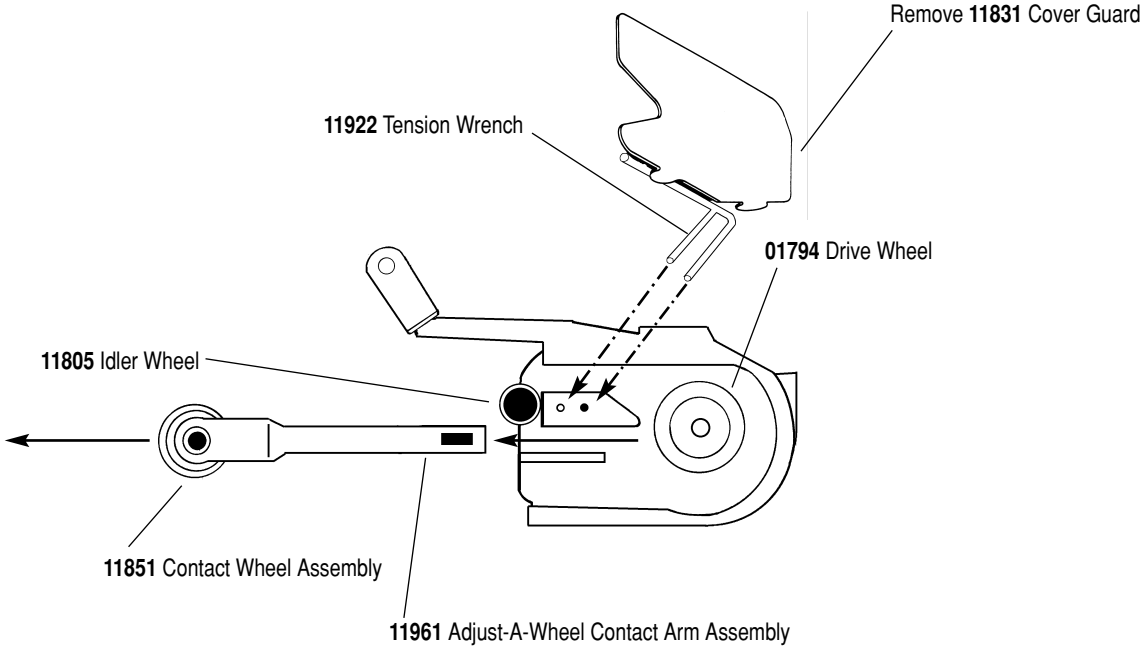

Dynabelter® Contact Arms

11681



Belt Size: 1" wide x 30" long.

11650 Contact Wheel: 2" diameter x 1" wide 70 durometer standard serrated urethane.

11605 Platen: 1" wide x 2-1/2" long. 7-1/2" workable reach. **11672** Contact Arm Assembly available; same as **11681** except with 90-duro contact wheel.

Note: The higher the durometer the harder the wheel.

2" Dia. x 1" W Urethane Wheel Assemblies Available For 11681

Durometer	Serration	Color	Part No.
90	Scoop	Amber	**11614**
90	Standard	Amber	**11618**
80	Standard	Blue	**11652**
70	Standard	Green	**11650**

11870



Belt Size: 2" wide x 30" long.

11847 Contact Wheel: 2" diameter x 2" wide 70 durometer standard serrated urethane.

Platen: Optional **11659** Platen Assembly is available for mounting 2" wide x 2-1/2" long Dynapad platen; has 7" workable reach. **11872** Contact Arm Assembly available; same as **11870** except with 90-duro contact wheel.

Note: 2" diameter x 2" wide urethane wheel assemblies are for extra heavy-duty machines only.

2" Dia. x 2" W Urethane Wheel Assemblies Available For 11870

Durometer	Serration	Color	Part No.
90	Standard	Amber	**11851**
70	Standard	Green	**11847**
70	Scoop	Green	**11849**
90	Scoop	Amber	**11853**

11663



- Grind, deburr, polish over Dynapad platen.
- 7-1/2" workable reach.

Belt Size: 1" wide x 30" long.
11616 Contact Wheel: 1" dia. x 1" wide 80 durometer smooth rubber.
11605 Platen: 1" wide x 2-1/2" long.

11682



- Grind, deburr fillet welds, inside corners.
- 7" workable reach.

Belt Size: 1/2" or 1" wide x 30" long.
11638 Contact Wheel: 4" dia. x 1/2" wide 70 durometer radiused rubber.
Platen: None

11668 Stroke Sander



- Wheel mount pivots to maintain surface contact.
- Work on broad areas, blend stainless.
- Leaves "in-line" scratch pattern.
- 6" workable reach.

Belt Size: 1" wide x 30" long.
11616 Contact Wheels: Two 1" wide x 1" dia. 80 durometer smooth rubber.
11605 Platen: 1" wide x 1-7/8" long.

11684



- Polish contours without gouging workpiece.
- Ideal for stainless pipe.
- 7" workable reach.

Belt Size: 1" wide x 30" long.
11642 Contact Wheel: 4" dia. x 5/8" wide 40 durometer serrated rubber. (60, 80, 90 duro urethane wheels available). **Platen:** None

11677



- Grind, blend, polish welds; strap polish using slack of belt.
- 7" workable reach.

Belt Size: 1" wide x 30" long.
11620 Contact Wheel: 4" dia. x 1" wide 40 durometer smooth rubber, (80 duro available). **Platen:** None.

11717 Adjust-A-Wheel

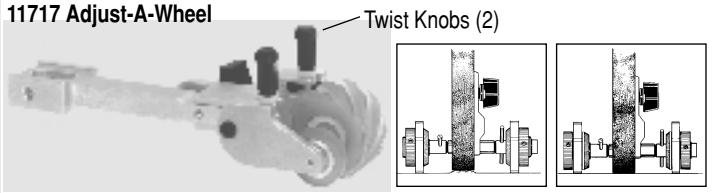

For best results when ordering 11717 Contact Arm:
For Dynabelter Model 11475:
Add **11705** Pressure Bar Assembly and **11794** Back Wheel Assembly.
For Dynabelter Model 11476: Add **11544** Pressure Bar, three **95150** Mounting Screws and **11794** Back Wheel Assembly.
Belt Size: 1" wide x 30" long.
11618 Contact Wheel: 2" dia. x 1" w 90-durometer scoop serrated urethane.
Platen: None.

11894



- Provides 9" workable reach. Grind off contact wheel; excellent for polishing off slack of belt.
- For use with extra heavy-duty models **11450** and **11477** only.

Belt Size: 2" wide x 34" long.
11902 Contact Wheel: 4" diameter x 2" wide 80-durometer scoop serrated urethane.
Platen: None.

Disassembly/Assembly Instructions

Important: Manufacturer's warranty is void if tool is disassembled before warranty expires.
A Motor Repair Kit (96259) is available which contains special tools for disassembly/assembly. Please refer to parts breakdown for part identification.

Tool Disassembly:

1. Disconnect tool from power source.
2. Remove back-up pad with a 24mm wrench.
3. Insert **01697** Inlet Bushing securely into vise.
4. Roll **07136** Handle Grip Back away from housing.
5. Remove **52495** Nut by using a 32mm wrench (P/N **96079**).
6. Separate valve body from housing.
7. Remove **95720** Screws (4) and **01791** Washers (4) from **52461** Housing Cap. Remove housing cap and **52477** Gasket.

Motor Disassembly:

1. Grip onto governor cage assembly and pull motor assembly from housing.
   Note: If motor assembly does not come out freely, gently tap tool rotor side down to "pop" motor from housing.
2. Remove governor cage assembly from **52466** Rotor (left hand thread).
3. Insert a tap pin into rear bearing plate and press the **52466** Rotor from the rear bearing plate.
4. Place motor assembly in softjaw vise.
5. Remove **01823** Washer and **01835** Shim from assembly.
6. Remove **01815** Rotor Nut with an adjustable wrench. Twist rotor nut from shaft.
7. Remove **52475** Cylinder, blades (4) and spacer from rotor.
8. Remove **52472** Front Bearing Plate , front bearing and shims from **52466** Rotor. **Note:** Bearing, front bearing plate and spacer are a slip fit into rotor.
9. Press **01036** Bearing from bearing plate.

Motor disassembly complete.

Motor Reassembly:

Important: Be certain all parts are cleaned and in good repair before reassembly.

1. Place **52466** Rotor in padded vise with threaded spindle facing upwards.
2. Slip **52467** Spacer onto rotor.
3. Place .002" shim into front bearing plate as initial spacing and slip **01825** Bearing into plate. **Note: 52471** Shim Pak contains .001" and .003" shims.
4. Install bearing/bearing plate assembly onto rotor.
5. Install **01815** Rotor Nut onto assembly.
6. Tighten rotor nut onto rotor, torque 22.5 N•m/200 in. - lbs.
7. Check clearance between rotor and bearing plate by using a .001" feeler gauge. Clearance should be at .001" to .0015". Adjust clearance by repeating steps 1-5 with different shims if necessary.
8. Once proper rotor/gap clearance is achieved, install well lubricated **52474** Blades (4) into rotor slots. Dynabrade Air Lube P/N **95842** (or equivalent) is recommended for lubrication before installation in rotor slots.
9. Install cylinder over rotor.
10. Press the **01036** Rear Bearing into **52476** Rear Bearing Plate. Press bearing/bearing plate assembly onto rotor. Be sure that pin and air slot line-up with pin hole and air inlet slot in cylinder.
11. Place the tool into a soft jaw vise and tighten the governor assembly (**52478** Governor Cage) torque 9.0 N•m/80 in. - lbs. (left hand thread).
12. Place **01835** Shim and **01823** Washer into housing.
13. Install **52477** Gasket and **52461** Housing Cap with **95720** screws and **01791** Washers, tighten screws to 9 N•m/80 in. - lbs.
14. Place complete motor assembly into housing. Be sure motor drops all the way into housing.
15. Motor adjustment must now be checked. With motor housing still mounted in vise, pull end of rotor and twist (10-15 lbs. force), rotor should turn freely without drag. If drag or rub is felt, then increase preload or remove shim. Also, push end of rotor and twist (10-15 lbs. force), rotor should turn freely without drag. If drag or rub is felt, then deload or add a shim.
16. Apply 2 drops of #271 Loctite® (or equivalent) to threads of adjustment bushing before tightening.
17. Slip **52491** Bushing through **52495** Nut and packing, and secure into housing.
18. Tighten **52491** Adjustment Bushing into housing torque 50 N•m/450 in. - lbs. Tighten valve body into housing.
19. Secure inlet bushing into vise. Place **52495** Nut and **01746** O-Ring onto valve body. Swivel **52494** Valve Body to desired throttle lever position.
20. Tighten **52495** Nut to 45 N•m/400 in. - lbs. Roll **07136** Grip back into place.

Tool assembly is complete. Please allow 30 minutes for adhesives to cure before operating tool.

Important: Motor should now be tested for proper operation at 90 PSI. If motor does not operate properly or operates at a higher RPM than marked on the tool, the tool should be serviced to correct the cause before use. Before operating, place 2-3 drops of Dynabrade Air Lube (P/N **95842**) directly into air inlet with throttle lever depressed. Operate tool for thirty seconds to determine if tool is operating properly and to allow lubricating oils to properly penetrate motor.

Loctite® is a registered trademark of Loctite Corp.

01845 Air Motor
(Includes 01794 Drive Wheel)

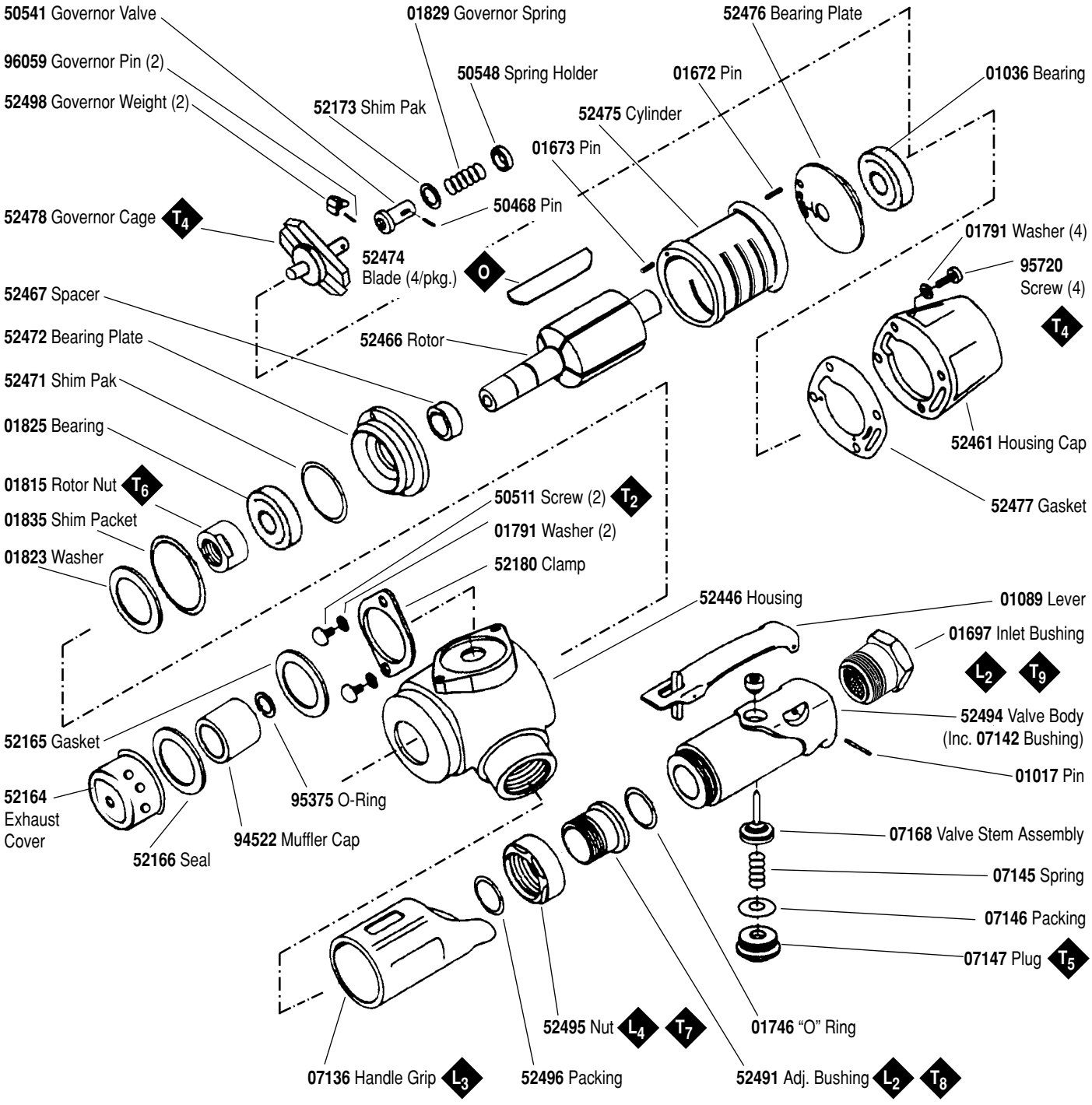

KEY

O Oil	G Grease
L	Loctite/Hernon: **L_2 = Loctite #271, L_3 = Loctite #380, L_4 = Hernon #940**
T	Torque: N•m x 8.85 = In. - lbs. **T_2 = 4.5 N•m, T_3 = 7 N•m, T_4 = 9 N•m, T_5 = 17 N•m, T_6 = 22.5 N•m, T_7 = 45 N•m, T_8 = 50 N•m, T_9 = 56 N•m**



Toll Free (USA) 1-800-828-7333
Toll Free (Can.) 1-800-344-1488

Visit our new Web Site via Industry.Net MROP On-Line: http://www.dynabrade.industry.net **E-Mail:** DynaTalk@aol.com

DYNABRADE, INC., 8989 Sheridan Drive • Clarence, NY 14031-1490 • Phone: (716) 631-0100 • Fax: 716-631-2073 • International Fax: 716-631-2524
DYNABRADE EUROPE S.àr.l., Zone Artisanale • L-5485 Wormeldange—Haut, Luxembourg • Telephone: 352 76 84 94 • Fax: 352 76 84 95

©DYNABRADE, INC., 1997

PRINTED IN USA