Parts Page Reorder No. PD96•88
Effective December, 1996
Supercedes PD95•31

.7 Hp/Gearless/Front Exhaust 3"Disc Sander

Model:
52424 – 15,000 RPM
52425 – 18,000 RPM
52426 – 20,000 RPM

For use with Norton Speed Lock Discs.

WARNING **Always operate, inspect and maintain this tool in accordance with the Safety Code for portable air tools (ANSI B186.1) and any other applicable safety codes and regulations. Please refer to Dynabrade's Warning/Safety Operating Instructions for more complete safety information.**

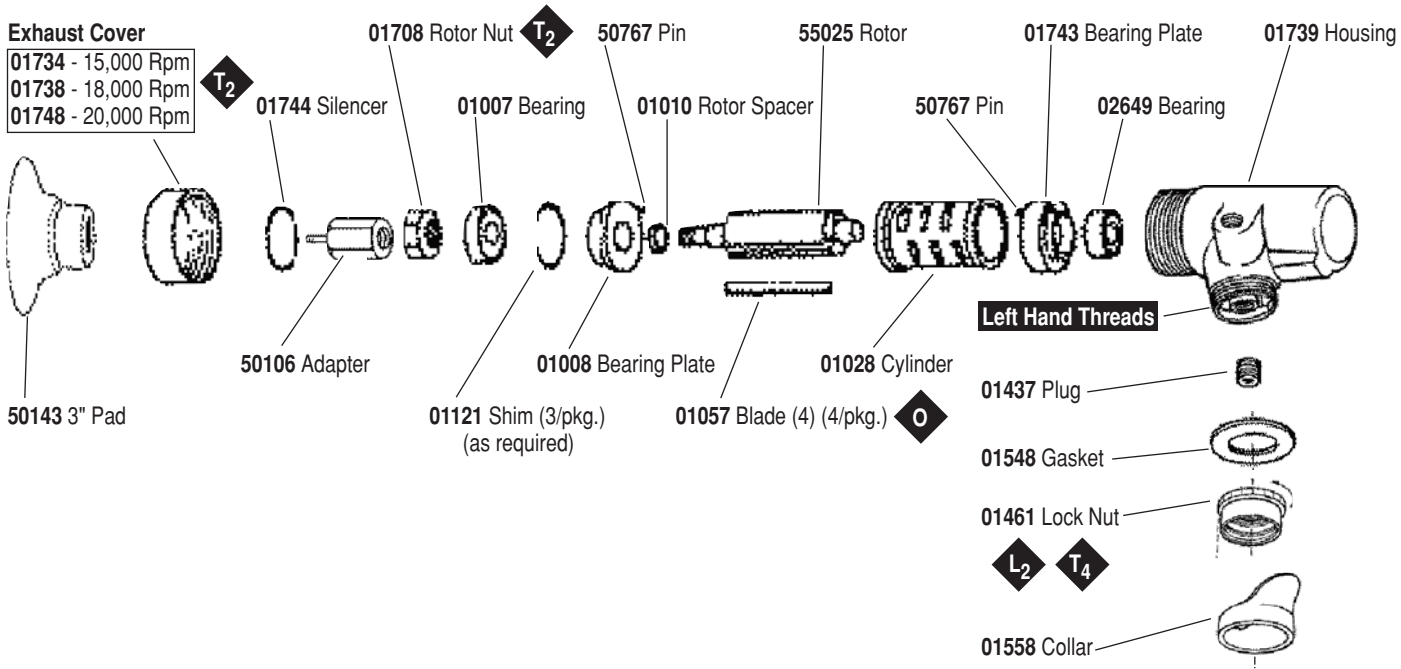

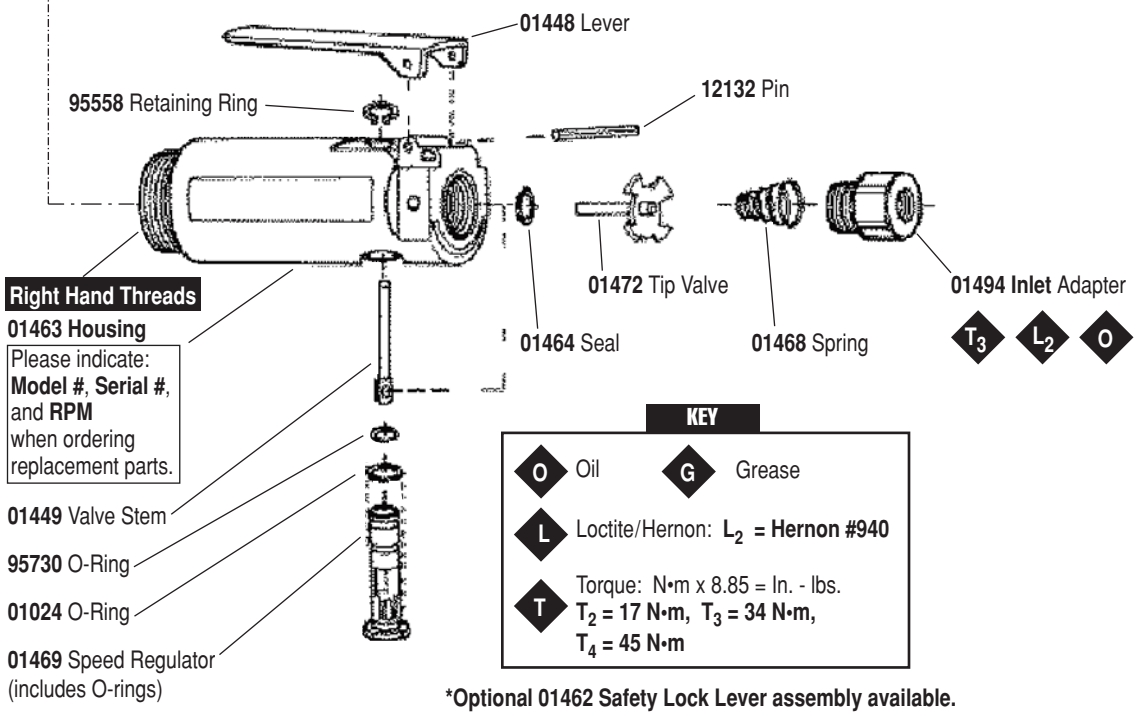

KEY

- O Oil
- G Grease
- L Loctite/Hernon: L_2 = **Hernon #940**
- T Torque: N•m x 8.85 = In. - lbs. **T_2 = 17 N•m, T_3 = 34 N•m, T_4 = 45 N•m**

***Optional 01462 Safety Lock Lever assembly available.**

See reverse side for Accessories and Important Operating, Maintenance and Safety Instructions.

Important Operating, Maintenance and Safety Instructions

Carefully read all instructions before operating or servicing any Dynabrade® Abrasive Power Tool.
Warning: Hand, wrist and arm injury may result from repetitive work motion and overexposure to vibration.
Important: All Dynabrade air tools must be used with a Filter-Regulator-Lubricator to maintain all warranties.

Operating Instructions:

Warning: Eye, face and body protection must be worn while operating power tools. Failure to do so may result in serious injury or death. Follow safety procedures posted in workplace.

1. With power source disconnected from tool, securely fasten abrasive/accessory on tool.
2. Install air fitting into inlet bushing of tool. **Important:** Secure inlet bushing of tool with a wrench before attempting to install the air fitting to avoid damaging valve body housing.
3. Connect power source to tool. Be careful not to depress throttle lever in the process.
4. Check tool speed with tachometer. If tool is operating at a higher speed than the RPM marked on the tool or operating improperly, the tool should be serviced to correct the cause before use.

Maintenance Instructions:

1. Check tool speed regularly with a tachometer. If tool is operating at a higher speed than the RPM marked on the tool, the tool should be serviced to correct the cause before use.
2. Some silencers on air tools may clog with use. Clean and replace as required.
3. All Dynabrade air motors should be lubricated. Dynabrade recommends one drop of air lube per minute for each 10 SCFM (example : if the tool specification state 40 SCFM, set the drip rate of your filter-lubricator at 4 drops per minute). Dynabrade Air Lube (P/N **95842**: 1pt. 473ml.) is recommended.
4. An air line filter-regulator-lubricator must be used with this air tool to maintain all warranties. Dynabrade recommends the following: **11289** Air Line Filter-Regulator-Lubricator — Provides accurate air pressure regulation, two-stage filtration of water contaminants and micro-mist lubrication of pneumatic components. Operates 28 CFM @ 90 PSI has 3/8" NPT female ports.
5. Use only genuine Dynabrade replacement parts. To reorder replacement parts, specify the **Model #**, **Serial #**, and **RPM** of your machine.
6. A motor tine-up kit (P/N **96045**) is available which includes assorted parts to help maintain motor in peek operating condition.
7. Mineral spirits are recommended when cleaning the tool and parts. Do not clean tool or parts with any solvents or oils containing acids, esters, keytones, chlorinated hydrocarbons or nitro carbons.

Safety Instructions:

Products offered by Dynabrade should not be converted or otherwise altered from original design without expressed written consent from Dynabrade, Inc.

- **Important:** User of tool is responsible for following accepted safety codes such as those published by the American National Standards Institute (ANSI).
- Operate machine for one minute before application to workpiece to determine if machine is working properly and safely before work begins.
- Always disconnect power supply before changing abrasive/accessory or making machine adjustments.
- Inspect abrasives/accessories for damage or defects prior to installation on tools.
- Please refer to Dynabrade's Warning/Safety Operating Instructions Tag (Reorder No. **95903**) for more complete safety information.
- **Warning:** Hand, wrist and arm injury may result from repetitive work, motion and overexposure to vibration.

Notice

All Dynabrade motors use the highest quality parts and metals available and are machined to exacting tolerances. The failure of quality pneumatic motors can most often be traced to an unclean air supply or the lack of lubrication. Air pressure easily forces dirt or water contained in the air supply into motor bearings causing early failure. It often scores the cylinder walls and the rotor blades resulting in limited efficiency and power. Our warranty obligation is contingent upon proper use of our tools and cannot apply to equipment which has been subjected to misuse such as unclean air, wet air or a lack of lubrication during the use of this tool.

One Year Warranty

Following the reasonable assumption that any inherent defect which might prevail in a product will become apparent to the user within one year from the date of purchase, all equipment of our manufacture is warranted against defects in workmanship and materials under normal use and service. We shall repair or replace at our factory, any equipment or part thereof which shall, within one year after delivery to the original purchaser, indicate upon our examination to have been defective. Our obligation is contingent upon proper use of Dynabrade tools in accordance with factory recommendations, instructions and safety practices. It shall not apply to equipment which has been subject to misuse, negligence, accident or tampering in any way so as to affect its normal performance. Normally wearable parts such as bearings, sanding pads, rotor blades, etc., are not covered under this warranty.

Disassembly/Assembly Instructions-.7 Hp Front Exhaust

Important: Manufacturer's warranty is void if tool is disassembled before warranty expires.

Notice: Dynabrade strongly recommends the use of their 52296 Repair Collar (sold separately) during assembly/disassembly activities. Failure to use this collar will highly increase the risk of damage to the valve body of this tool. Please refer to parts breakdown for part identification.

Motor Disassembly:

1. Disconnect tool from power source.
2. Secure air tool in vise using **52296** Repair Collar. Remove pad assembly.
3. With an open end wrench remove exhaust cover by turning counter-clockwise. Remove **01744** Silencer and 50106 Adapter.
5. Remove rotor nut from rotor shaft by inserting a 3/16" hex wrench through rotor nut and into rotor shaft. Twist rotor nut from shaft.
6. Remove **01028** Cylinder, blades (4) and **01010** Spacer from rotor. **Note: 01007** Bearing, **01008** Front Bearing Plate and spacer are a slip fit onto rotor.
7. Press rotor from **01743** Rear Bearing Plate. Press **02649** Bearing from bearing plate.

Motor disassembly is complete.

Valve Body Disassembly:

1. Position valve body in vise using **52296** Repair Collar with air inlet facing up.
2. Remove air fitting by securing **01494** Inlet Adapter with a wrench and twist air fitting from inlet adapter.
   Important: 01494 Inlet Adapter must be secured before attempting to remove air fitting to avoid damaging valve body housing.
3. Using needle nose pliers, remove **01468** Spring, **01472** Tip Valve and seal.
4. Using a 2.5mm drift pin, tap **12132** Pin from housing and remove throttle lever.
5. Remove **95558** Retaining Ring using retaining ring pliers.
6. Push **01469** Regulator from valve body housing and remove O-rings.

Disassembly complete.

Motor Reassembly:

Important: Be sure parts are clean and in good repair before reassembly.

1. Place rotor in padded vise with a threaded spindle facing upwards.
2. Slip **01010** Spacer onto rotor.
3. Place a .002" shim into front bearing plate as an initial spacing and slip bearing into plate. **Note: 01121** Shim Pak contains .001" and .002" shims.
4. Install bearing/bearing plate assembly onto rotor.
5. Tighten rotor nut onto rotor (torque to 17 N•m/150 in. - lbs.).
6. Check clearance between rotor and bearing plate by using a .001" feeler gauge. Clearance should be at .001" to .0015". Adjust clearance by repeating steps 1-5 with different shim if necessary.
7. Once proper rotor/gap clearance is achieved, install well lubricated **01057** Blades (4) into rotor slots. Dynabrade air lube P/N **95842** is recommended for lubrication.
8. Install cylinder over rotor. Be sure air inlet holes of cylinder face away from bearing plate.
9. Press **02649** Rear Bearing into **01743** Rear Bearing Plate. Press bearing/bearing plate assembly onto rotor. Be sure that pin and air inlet holes line-up with pin slot and air inlet holes in cylinder.
   Important: Fit must be snug between bearing plates and cylinder. If too tight, rotor will not turn freely. Rotor must then be lightly tapped at press fit end so it will turn freely while still maintaining a snug fit. A loose fit will not achieve the proper preload of motor bearings.
10. Secure motor housing in padded vise so motor cavity faces upwards.
11. Install motor assembly into housing. Be sure motor drops all the way into housing.
12. Insert **01744** Silencer into exhaust cover and install onto motor housing (torque 17 N•m/150 in. - lbs.).
13. Motor adjustment must now be checked. With motor housing still mounted in vise, pull end of rotor and twist (10-15 lbs. force), rotor should turn freely without drag. If drag or rub is felt, then increase preload or remove shim. Also, push end of rotor and twist (10-15 lbs. force), rotor should turn freely without drag. If drag or rub is felt, then deload or add shim.

Valve Body Reassembly:

1. Insert **01469** Speed Regulator Assembly with O-rings into valve body. Secure with **95558** Retaining Ring.
2. Secure valve body in vise using **52296** Repair Collar with air inlet facing upwards.
3. Insert **01464** Seal into housing.
4. Line up hole in valve stem with hole in housing (looking past brass bushing). Insert **01472** Tip Valve so that the metal pin passes through the hole in the valve stem. Install **01468** Spring (small end towards tip valve).
5. Apply Hernon #940 PST Pipe Sealant to threads of **01494** Inlet Adapter and install valve body (torque 34 N•m/200 in. - lbs.).
6. Install throttle lever and **12132** Pin.

Tool Assembly is complete. Please allow 30 minutes for adhesives to cure before operating tool.

Important: Motor should now be tested for proper operation at 90 PSI. If motor does not operate properly or operates at a higher RPM than marked on the tool, the tool should be serviced to correct the cause before use. Before operating, place 2-3 drops of Dynabrade Air Lube (P/N **95842**) directly into air inlet with throttle lever depressed. Operate tool for 30 seconds to determine if tool is operating properly and to allow lubricating oils to properly penetrate motor

Loctite® is a registered trademark of Loctite Corp.

Accessories



Dynaswivel®
Swivels 360° at two locations which allows an air hose to drop straight to the floor, no matter how the tool is held.

- **95460** 1/4" NPT



96045 Motor Tune-Up Kit:

- Includes assorted parts to help maintain motor in tip-top shape.



50143 - 3" dia. Speed Lok Locking Type

- 1/4"-20 female thread.
- Medium density pad.
- 20,000 max. Rpm.

Speed Lok® is a registered trademark of Norton Co.

Wrenches

95281 – 19 mm open-end

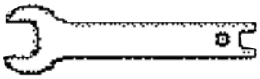

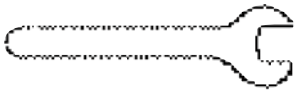

95262 – 14 mm open-end

DYNABRADE, INC., 8989 Sheridan Drive • Clarence, NY 14031-1490 • Phone: (716) 631-0100 • Fax: 716-631-2073 • International Fax: 716-631-2524
DYNABRADE EUROPE S.àr.l., Zone Artisanale • L-5485 Wormeldange—Haut, Luxembourg • Telephone: 352 76 84 94 • Fax: 352 76 84 95
©DYNABRADE, INC., 1996
PRINTED IN USA