Dynafile®

MODEL 11142 – SLOW SPEED PARTS

EFFECTIVE FEBRUARY, 1990

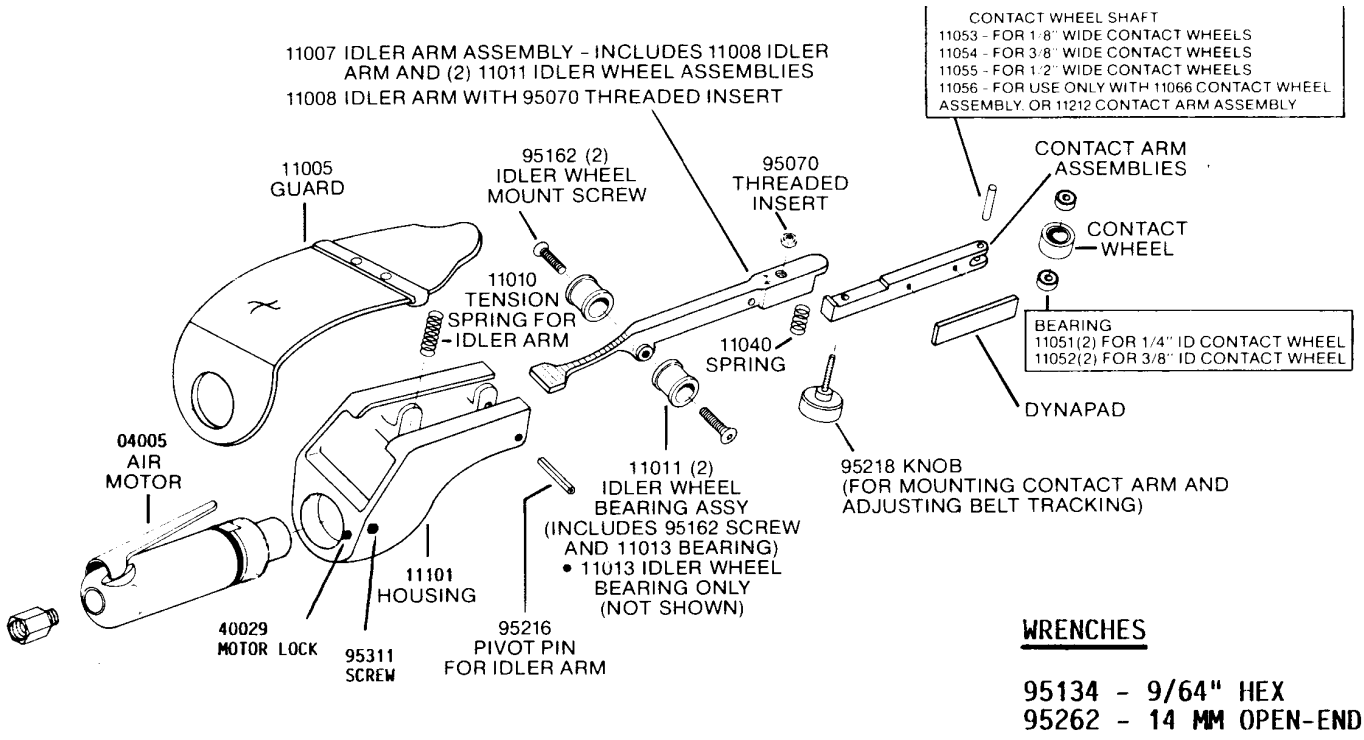

NOTE: 11218 CONTACT ARM ASSEMBLY INCLUDED WITH 11142 SLOW-SPEED DYNAFILE®.

SEE REVERSE SIDE FOR BASIC MOTOR ASSEMBLY.

IMPORTANT: ALL DYNABRADE AIR TOOLS MUST BE USED WITH A FILTER-REGULATOR-LUBRICATOR TO MAINTAIN ALL WARRANTIES.

04005 AIR MOTOR (INCLUDES 01111 DRIVE WHEEL)

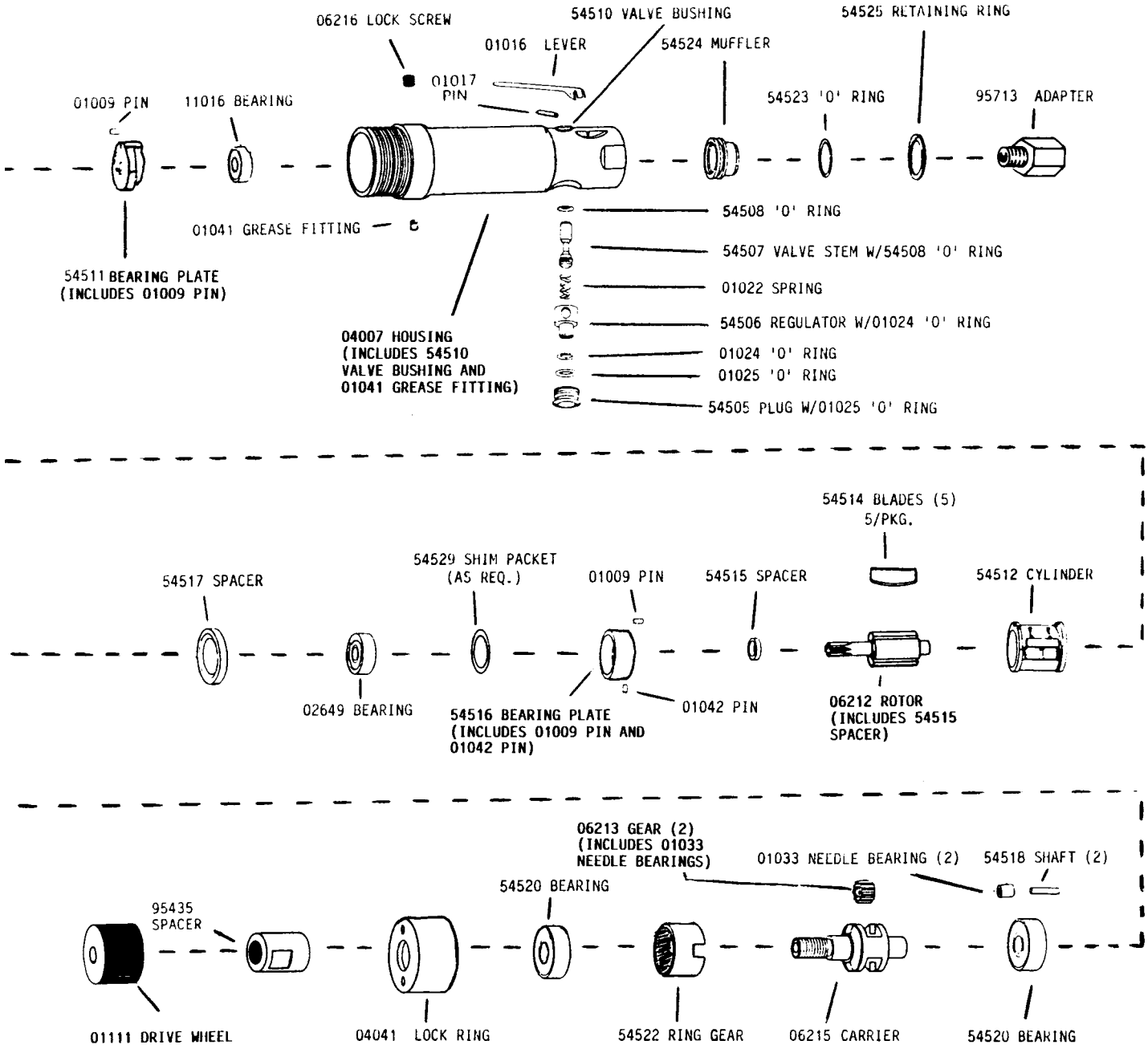

DYNABRADE

ABRASIVE POWER TOOLS

DYNABRADE, INC.
72 EAST NIAGARA STREET, TONAWANDA, NEW YORK 14150, 716-694-4600/TELEX 646540 "DYNABRADE, TWDA"

© DYNABRADE, INC. 1990

PRINTED IN U.S.A.