Parts Page Reorder No. PD11.07
Effective February, 2011
Supersedes PD96.20

1.2 hp Right Angle Disc Grinder

5/8"-11 Male Spindle

Safety, Operation and Maintenance – Save This Document and Educate All Personnel

Model	RPM	Pad Size
50346	12,000	5" Dia.
50350	6,000	7" Dia.



Find The Most Current Offering of Support Documents and Accessories at www.Dynabrade.com

⚠ WARNING

Read and understand this tool manual before operating your air tool. Follow all safety rules for the protection of operating personnel as well as adjacent areas. Always operate, inspect and maintain this tool in accordance with the American National Standards Institute (ANSI) Safety Code for Portable Air Tools – B186.1. For additional safety information, refer to Safety Requirements for the Use, Care and Protection of Abrasive Wheels – ANSI B7.1, Code of Federal Regulation – CFR 29 Part 1910, European Committee for Standards (EN) Hand Held Non-Electric Power Tools – Safety Requirements and applicable State and Local Regulations.

Read and understand tool manual before work starts to reduce risk of injury to operator, visitors, and tool.

Eye protection must be worn at all times, eye protection to conform to ANSI Z87.1.

Ear protection to be worn when exposure to sound, exceeds the limits of applicable Federal, State or local statues, ordinances and/or regulations.

Practice safety requirements. Work alert, have proper attire, and do not operate tools under the influence of alcohol or drugs.

Respiratory protection to be used when exposed to contaminants that exceed the applicable threshold limit values required by law.

Air line hazard, pressurized supply lines and flexible hoses can cause serious injury. Do not use damaged, frayed or deteriorated air hoses and fittings.

Some dust created by sanding, grinding, drilling, and other construction activities contain chemicals known to cause cancer, birth defects or other reproductive harm. Some examples of these chemicals are:

- Lead from lead-based paints
- Crystalline silica from bricks and cement and other masonry products
- Arsenic and chromium from chemically treated lumber

Your risk from these exposures varies, depending on how often you do this type of work. To reduce your exposure to these chemicals: work in a well ventilated area, and work with approved safety equipment, such as those dust masks that are specially designed to filter out microscopic particles.

SAFETY SAFETY and OPERATING INSTRUCTIONS

Carefully Read and Understand the General and Disc Grinder sections found in Tool Safety and Operating Guidelines (PN00001676) Before Handling or Using Tool.

Carefully Read all instructions before operating or servicing any Dynabrade® Abrasive Power Tool. Products offered by Dynabrade are not to be modified, converted or otherwise altered from the original design.

Tool Intent: Depressed Center Wheel Grinders are used to grind; metal, stone, fiberglass or plastic surfaces using 7/8" center hole type 27 reinforced grinding wheels.

DO NOT USE Tool for Anything Other Than Its Intended Applications.

Training: Proper care, maintenance, and storage of your air tool will maximize tools performance and reduce chance for accident.

Employer's Responsibility: Provide operators with safety instructions and training for safe use of tools and accessories.

Report to Your Supervisor any Condition of the Tool, Accessories or Operation you Consider Unsafe.

MAINTENANCE INSTRUCTIONS

Important: To keep tool safe, a Preventative Maintenance Program is recommended. The program should included inspection of the tool and all related accessories and consumables, including air lines, pressure regulators, filters, oilers, etc. refer to ANSI B186.1 for additional maintenance information. If accessory or tool breakage occurs, investigate failure to determine the cause and correct before issuing tool for work. Use the following schedule as a starting point in developing a Preventative Maintenance Program. If tool does not operate properly (RPM, Vibration, Start/Stop) after these scheduled checks or at any time, the tool must be repaired and corrected before returning tool to use.

INSTALLATION

- To ensure long life and dependable service, use a Closed Loop Air System and Filter-Regulator-Lubricator as diagramed below.
- Each tool should have its own dedicated hose connected to an air supply manifold. Quick disconnects should be installed at the manifold in an effort to reduce contamination into the tool.
- It is strongly recommended that all Dynabrade rotary vane air tools be used with a Filter-Regulator-Lubricator to minimize the possibility of misuse due to unclean air, wet air or insufficient lubrication. Dynabrade recommends the following: **10681** Air Line Filter-Regulator-Lubricator — Provides accurate air pressure regulation, two-stage filtration of water contaminants and micro-mist lubrication of pneumatic components.
- Dynabrade recommends one drop of air lube per minute for each 20 SCFM (example: if the tool specification states 40 SCFM, set the drip rate on the filter-lubricator to 2 drops per minute) Dynabrade Air Lube (P/N **95842**: 1pt/473ml) is recommended.

MAINTENANCE SCHEDULE

Daily (every 8 hours):

- Inspect tool and accessories for damage or broken parts. Replace items as necessary to ensure proper operation and safety.
- Lubricate motor as recommended. Use Dynabrade Air Lube (P/N **95842**: 1pt/473ml) 10W/NR. (1 Drop per minute of air lube per 20 SCFM.)
- Check air line pressure with a gage. (MAX. 90 PSIG or 6.2 Bar operating pressure at the air inlet of the tool.)
- Right angled gear and wick system through gear case grease fitting with 3 plunges of gear oil (P/N **95848**) and grease gun (P/N **95541**). (Prime grease gun prior to greasing.)
- Check tool for proper operation: If operating improperly or demonstrates unusual vibration, the tool must be serviced and problem corrected before further use.

Every 20 Hours or Once a Week Which Ever Comes First:

- Check free speed of tool without the abrasive accessory mounted. Measure RPM (speed) with tachometer and with air pressure set at 90 PSIG while the tool is running. If a governed tool is operating at a higher speed than the RPM marked on the tool housing, the tool must be serviced and corrected before use. A non-governed tool may exceed the RPM marked on the tool by 10% when operated at free speed with no accessories.
- If tool is running fast look for worn, damaged or missing governors, air control rings and silencers. Special care must be taken when servicing governors and speed control devices. Injection molded governor assemblies are non-serviceable and must be replaced.
- If tool is running slow look for clogged inlet screen, air stream, silencer(s) or a malfunctioning governor (see concerns for servicing governors). Service as required.

Every 50 Hours:

- Lubricate planetary gears through gear case grease fitting with 3 plunges of grease (P/N **95542**) and grease gun (P/N **95541**). (Prime grease gun prior to greasing.)

REPAIR

- Use only genuine Dynabrade replacement parts to ensure quality. To order replacement parts, specify Model#, Serial# and RPM of your air tool.
- Mineral spirits are recommended when cleaning the tool and parts. Do not clean tool or parts with any solvents or oils containing acids, esters, ketones, chlorinated hydrocarbons or nitro carbons.
- DO NOT clean or maintain tools with chemicals that have a low flash point (example: WD-40®).
- A Motor Tune-Up Kit is available which includes high wear and medium wear motor parts.
- Air tool markings must be kept legible at all times, if not, reorder housing and replace. User is responsible for maintaining specification information.
- After maintenance is performed on tool, add a few drops of Dynabrade Air Lube (P/N **95842**) to the tool inlet and start the tool a few times to lubricate air motor. Verify RPM (per 20 hr maintenance schedule), vibration and operation.

HANDLING & STORAGE

- Use of tool rests, hangers and/or balancers is recommended.
- Protect tool inlet from debris (see Notice).
- DO NOT carry tool by air hose or near the tool throttle lever.
- Store accessories in protective racks or compartments to prevent damage.
- Follow the handling instructions outlined in the operating instructions when carrying the tool and when changing accessories.
- Protect accessories from exposure to water, solvents, high humidity, freezing temperature and extreme temperature changes.

END OF USE/DISPOSAL

When tool has reached its end of useful service, disassemble tool into its primary components (i.e. steel, aluminum and plastic part) and recycle or discard per local, state and/or federal regulations as to not harm the environment.

NOTICE

All Dynabrade motors use the highest quality parts and metals available and are machined to exacting tolerances. The failure of quality pneumatic motors can most often be traced to an unclean air supply or the lack of lubrication. Air pressure easily forces dirt or water contained in the air supply into motor bearings causing early failure. It often scores the cylinder walls and the rotor blades resulting in limited efficiency and power. Our warranty obligation is contingent upon proper use of our tools and cannot apply to equipment which has been subjected to misuse such as unclean air, wet air or a lack of lubrication during the use of this tool.

AIR SYSTEM

Closed Loop Pipe System, Sloped in Direction of Air Flow

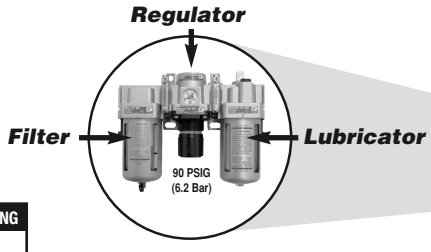

LUBRICATOR SETTING
1 **DROP/MIN.**
20 **SCFM**

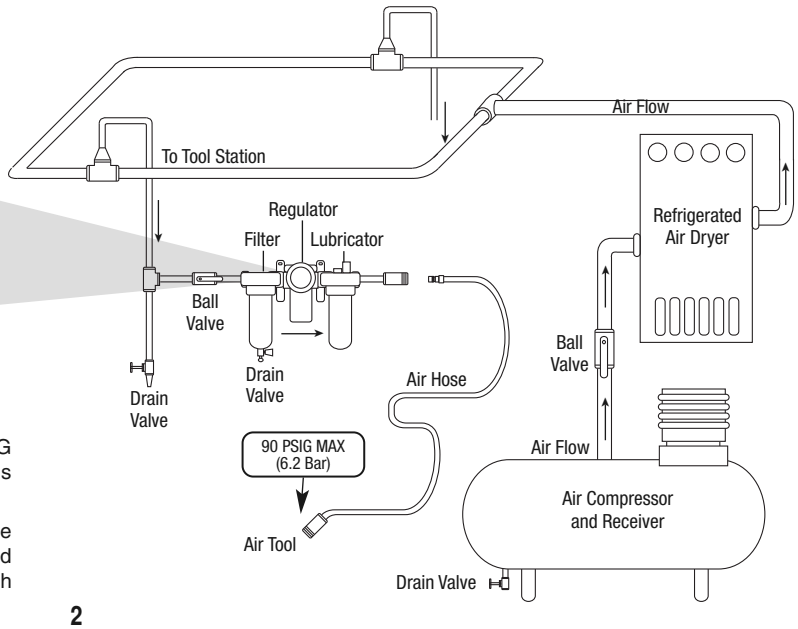

- Dynabrade Air Power Tools are designed to operate at 90 PSIG (6.2 Bar) maximum air pressure at the tool inlet, when the tool is running. Use recommended regulator to control air pressure.
- Ideally the air supply should be free from moisture. To facilitate removing moisture from air supply, the installation of a refrigerated air dryer after the compressor and the use of drain valves at each tool station is recommended.

MODEL:
50346 - *12,000 RPM*
50350 - *6,000 RPM*

1.2 hp Right Angle Disc Grinder
Complete Assembly

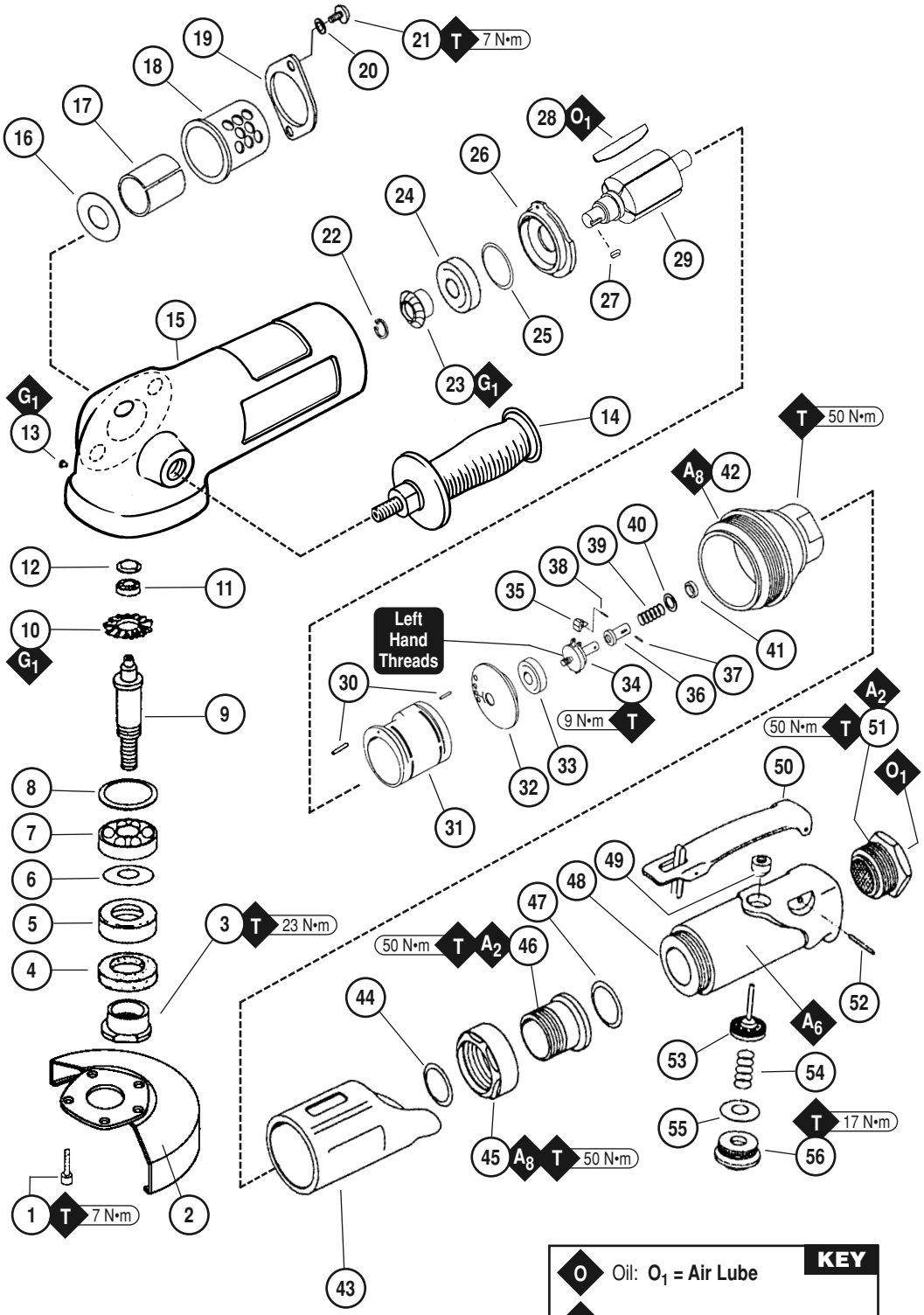

KEY

- **O** Oil: **O_1 = Air Lube**
- **A** Adhesive: **A_2 = Loctite #271**, **A_6 = Loctite #380**, **A_8 = Loctite #567**
- **T** Torque: **N•m x 8.85 = In. - lbs.**
- **G** Grease: **G_1 = Lubriplate 630 AA**

Index Key

No.	Part #	Description
1	**95897**	Screw (5)
2	**52094**	Guard
3	**52118**	Spindle Nut
4	**52089**	Washer
5	**50412**	Felt Ring
6	**52088**	Spacer
7	**50431**	Bearing
8	**52120**	Shim Pack (3/pkg.)
9	**52117**	Spindle
10	**Bevel Gear**	
	52159	6,000 RPM
	52125	12,000 RPM
11	**12152**	Bearing
12	**50424**	Spindle Cap
13	**01041**	Lubricant Fitting
14	**52169**	Handle
15	**Housing** (Incl. **01041** Fitting)	
	52114	For Model - **50350**
	52115	For Model - **50346**
16	**52165**	Gasket
17	**52167**	Felt Silencer
18	**52164**	Exhaust Cover
19	**52180**	Clamp
20	**01791**	Washer (2)
21	**50511**	Screw (2)
22	**95939**	Retaining Ring
23	**Bevel Pinion**	
	52158	6,000 RPM
	52124	12,000 RPM
24	**01036**	Bearing
25	**01277**	Shim Pack (3/pkg.)
26	**07119**	Front Bearing Plate
27	**50435**	Key
28	**07107**	Vane (5/pkg.)
29	**07106**	Rotor
30	**01673**	Pin (2)
31	**07118**	Cylinder
32	**07114**	Rear Bearing Plate
33	**01007**	Bearing
34	**Governor Cage**	
	07113	6,000 RPM
	07124	12,000 RPM
35	**Governor Weight** (2)	
	50399	6,000 RPM
	52086	12,000 RPM
36	**50463**	Governor Valve
37	**50470**	Pin
38	**50938**	Governor Pin (2)
39	**Governor Spring**	
	52182	6,000 RPM
	52126	12,000 RPM
40	**95611**	Shim (as req.) 6/Pkg.
41	**50471**	Spring Holder
42	**52090**	Adapter
43	**07136**	Grip
44	**02658**	Packing
45	**02631**	Nut
46	**02626**	Adjustment Bushing
47	**01746**	O-Ring
48	**07141**	Valve Body (Incl. **07142** Bushing)
49	**07142**	Bushing
50	**01089**	Safety Lever
51	**01697**	Inlet Bushing
52	**01017**	Pin
53	**07168**	Valve Stem Assy.
54	**07145**	Spring
55	**07146**	Packing
56	**07147**	Plug
–	**95049**	3/16" Hex Key
–	**95304**	24 mm Wrench

MOUNTING ARRANGEMENT

Index Key	
No.	Description
1	Spacers (2) As Req.
2	Wheel Adapter Back
3	7/8" I.D. Depressed Center Wheel
4	Adapter Nut
5	Back Flange
6	Front Flange

All Of The Above Are Not Included With Tool.

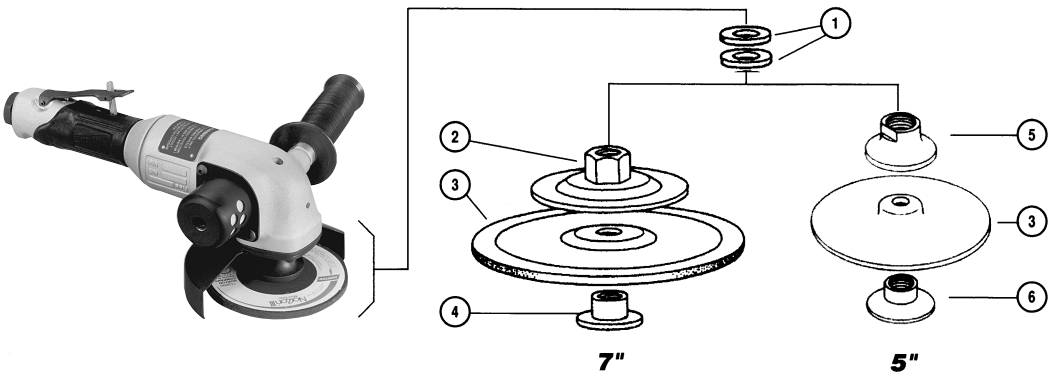

LIFETIME WARRANTY

To validate Dynabrade Lifetime Warranty, you must register each tool at: www.dynabrade.com. Registration of each tool at website is required. Dynabrade will not honor Lifetime Warranty on unregistered tools. Please view the entire Lifetime Warranty Policy at : www.dynabrade.com.

MACHINE SPECIFICATIONS

Model	Speed	Power	Sound	Air Consumption	Wheel Size	Weight	Length	Height
50346	12,000 RPM	1.2 hp (893 W)	87 db(A)	41 SCFM 1,161 (LPM)	5" Dia.	4.8 lb. (2.2 kg)	11.75" (298 mm)	3.6" (98 mm)
50350	6,000 RPM	1.2 hp (893 W)	83 db(A)	43 SCFM 1,218 (LPM)	7" Dia.	6.8 lb. (3.1 kg)	11.75" (298 mm)	4.6" (79 mm)

Additional Specifications: Hose I.D. Size 1/2" (15 mm) • 90 PSIG (6.2 Bars) • 1/2" NPT

OPTIONAL ACCESSORIES



96042 Motor Tune-Up Kit:
Includes assorted parts to help maintain peek motor operating condition.



Dynabrade Air Lube
- Formulated for pneumatic equipment.
- Absorbs up to 10% of its weight in water.
- Prevents rust and formation of sludge.
- Keeps pneumatic tools operating longer with greater power and less down time.

95842: 1pt. (473 ml)
95843: 1 gal. (3.8 L)



Dynaswivel®
Swivels 360° at two locations which allows an air hose to drop straight to the floor, no matter how the tool is held.
- **95462** 1/2" NPT



95542 Grease 10 oz.
- Multi-purpose grease for all types of bearings, cams, gears.
- High film strength; excellent resistance to water, steam, etc.
- Workable range 0˚F to 300˚F.

95541 Push-type Grease Gun
- One-hand operation.

REFERENCE CONTACT INFORMATION

1. **American National Standards Institute – ANSI**
   25 West 43rd Street
   Fourth Floor
   New York, NY 10036
   Tel: 1 (212) 642-4900
2. **Government Printing Office – GPO**
   Superintendent of Documents
   Attn. New Orders
   P.O. Box 371954
   Pittsburgh, PA 15250-7954
   Tel: 1 (202) 512-1803
3. **Power Tool Institute, Inc.**
   P.O. Box 818
   Yachata, Oregon 97498-0818
   Tel: 1 (503) 547-3185
4. **European Committee for Standardization**
   Rue de Stassart 36
   B - 1050 Brussels, Belgium

DYNABRADE, INC. **www.dynabrade.com**
8989 Sheridan Drive • Clarence, NY 14031-1419 • Phone: (716) 631-0100 • Fax: 716-631-2073 • International Fax: 716-631-2524
©DYNABRADE, INC., 2011
PRINTED IN USA PD11.07_02/11