Right Angle Rotary Polisher
Electronic Variable Speed

Parts Page Reorder No. PD09•46
Effective September, 2009
Supersedes PD08•42R

Tool Manual – Safety, Operation and Maintenance

SAVE THIS DOCUMENT, EDUCATE ALL PERSONNEL

Model:

51580 - 0-3,000 RPM Dial
- Variable Speed On/Off Switch
- Rotating Switch Handle
- 120V



C US

⚠ WARNING

Read and understand this tool manual before operating your tool. Follow all safety rules for the protection of operating personnel as well as adjacent areas. For safety information, refer to Code of Federal Regulation – CFR 29 Part 1910, – Safety Requirements and applicable State and Local Regulations.

SAFETY LEGEND



⚠ WARNING

Read and understand tool manual before work starts to reduce risk of injury to operator, visitors, and tool.

⚠ WARNING

Practice safety requirements. Work alert, have proper attire, and do not operate tools under the influence of alcohol or drugs.





⚠ WARNING

Eye protection must be worn at all times, eye protection to conform to ANSI Z87.1.

⚠ WARNING

Ear protection to be worn when exposure to sound, exceeds the limits of applicable Federal, State or local statues, ordinances and/or regulations.





⚠ WARNING

Respiratory protection to be used when exposed to contaminants that exceed the applicable threshold limit values required by law.

⚠ WARNING

Electric shock hazard. Avoid bodily contact with grounded objects, bodies of water. Do not damage cord set.



⚠ WARNING

Some dust created by grinding, drilling, sanding, and other construction activities contain chemicals known to cause cancer, birth defects or other reproductive harm. Some examples of these chemicals are:

- Lead from lead-based paints
- Crystalline silica from bricks and cement and other masonry products
- Arsenic and chromium from chemically treated lumber

Your risk from these exposures varies, depending on how often you do this type of work. To reduce your exposure to these chemicals: work in a well ventilated area, and work with approved safety equipment, such as those dust masks that are specially designed to filter out microscopic particles.

Caution: Hand, wrist and arm injury may result from repetitive work, motion and overexposure to vibration.

Tool Intent: Dynabrade Right Angle Rotary Polisher for polishing paint finishes, acrylics, wood, etc.

GENERAL POWER TOOL SAFETY WARNINGS

⚠ WARNING **Read all safety warnings and all instructions.** *Failure to follow the warnings and instructions may result in electric shock, fire and/or serious injury.*

SAVE ALL WARNINGS AND INSTRUCTIONS FOR FUTURE REFERENCE

The term "power tool" in the warnings refers to your mains-operated (corded) power tool or battery-operated (cordless) power tool.

Work Area safety

1. **Keep your work area clean and well lit.** *Cluttered or dark areas invite accidents.*
2. **Do not operate power tools in explosive atmospheres, such as in the presence of flammable liquids, gases, or dust.** *Power tools create sparks which ignite the dust or fumes.*
3. **Keep children and bystanders away while operating a power tool.** *Distractions can cause you to lose control.*

Electrical Safety

1. **Power tool plugs must match the outlet. Never modify the plug in any way. Do not use any adapter plugs with earthed (grounded) power tools.** *Unmodified plugs and matching outlets will reduce risk of electric shock.*
2. **Avoid body contact with earthed or grounded surfaces such as pipes, radiators, ranges and refrigerators.** *There is an increased risk of electric shock if your body is earthed or grounded.*
3. **Do not expose power tools to rain or wet conditions.** *Water entering a power tool will increase the risk of electric shock.*
4. **Do not abuse the cord. Never use the cord for carrying, pulling or unplugging the power tool. Keep cord away from heat, oil, sharp edges or moving parts.** *Damaged or entangled cords increase the risk of electric shock.*

(continued on page 2)

Electrical Safety (Continued)

5. **When operating a power tool outdoors, use an extension cord suitable for outdoor use.** *Use of a cord suitable for outdoor use reduces the risk of electric shock.*
6. **If operating a power tool in a damp location is unavoidable, use a residual current device (RCD) protected supply.** *Use of an RCD reduces the risk of electric shock.*

Personal Safety

1. **Stay alert, watch what you are doing and use common sense when operating a power tool. Do not use power tool while you are tired or under the influence of drugs, alcohol, or medication.** *A moment of inattention while operating power tools may result in serious personal injury.*
2. **Use personal protective equipment. Always wear eye protection.** *Protective equipment such as dust masks, non-skid safety shoes, hard hat, or hearing protection used for appropriate conditions will reduce personal injury.*
3. **Prevent unintentional starting. Ensure the switch is in the off-position before connecting to power source and/or battery pack, picking up or carrying the tool.** *Carrying power tools with your finger on the switch or energizing power tools that have the switch on invites accidents.*
4. **Remove any adjusting key or wrench before turning the power tool on.** *A wrench or a key left attached to a rotating part of the power tool may result in personal injury.*
5. **Do not overreach. Keep proper footing and balance at all times.** *This enables better control of the power tool in unexpected situations.*
6. **Dress properly. Do not wear loose clothing or jewellery. Keep your hair, clothing and gloves away from moving parts.** *Loose clothes, jewellery or long hair can be caught in moving parts.*
7. **If devices are provided for the connection of dust extraction and collection facilities, ensure these are connected and properly used.** *Use of dust collection can reduce dust-related hazards.*

Power Tool Use and Care

1. **Do not force the power tool. Use the correct power tool for your application.** *The correct tool will do the job better and safer at the rate for which it was designed.*
2. **Do not use the power tool if switch does not turn it on and off.** *Any power tool that cannot be controlled with the switch is dangerous and must be repaired.*
3. **Disconnect the plug from the power source and/or the battery pack from the power tool before making any adjustments, changing accessories, or storing power tool.** *Such preventative safety measures reduce the risk of starting the power tool accidentally.*
4. **Store idle power tools out of the reach of children and do not allow persons unfamiliar with the power tool or these instructions to operate the power tool.** *Power tools are dangerous in the hands of untrained users.*
5. **Maintain power tools. Check for misalignment or binding of moving parts, breakage of parts and any other condition that may affect the power tool's operation. If damaged, have the power tool repaired before use.** *Many accidents are caused by poorly maintained power tools.*
6. **Keep cutting tools sharp and clean.** *Properly maintained cutting tools with sharp cutting edges are less likely to bind and are easier to control.*
7. **Use the power tool, accessories and tool bits etc. in accordance with these instructions, taking into account the working conditions and the work to be performed.** *Use of the power tool for operations different from those intended could result in a hazardous situation.*

Service

1. **Have your power tool serviced by a qualified repair person using only identical replacement parts.** This will ensure that the safety of the power tool is maintained.

SPECIFIC SAFETY RULES

Safety Warnings Common for Sanding and Polishing Operations:

1. **Hold power tools by insulated gripping surfaces only when performing an operation where the cutting tool may contact hidden wiring or its own cutting accessory cord.** *Contact with a "live" wire will make exposed metal parts of the tool "live" and shock the operator.*
2. **This power tool is intended to function as a polisher. Read all safety warnings, instructions, illustrations and specifications provided with this power tool.** *Failure to follow all instructions listed below may result in electric shock, fire and/or serious injury.*
3. **Operations such as grinding, wire brushing, or cutting-off are not recommended to be performed with this power tool.** *Operations for which the power tool was not designed may create a hazard and cause personal injury.*
4. **Do not use accessories which are not specifically designed and recommended by the tool manufacturer.** *Just because the accessory can be attached to your power tool, it does not assure safe operation.*
5. **The rated speed of the accessory must be at least equal to the maximum speed marked on the power tool.** *Accessories running faster than their rated speed can break and fly apart.*
6. **The outside diameter and the thickness of your accessory must be within the capacity rating of your power tool.** *Incorrectly sized accessories cannot be adequately guarded or controlled.*
7. **The arbor size of wheels, flanges, backing pads or any other accessory must properly fit the spindle of the power tool.** *Accessories with arbor holes that do not match the mounting hardware of the power tool will run out of balance, vibrate excessively and may cause loss of control.*
8. **Do not use a damaged accessory. Before each use inspect the accessory such as abrasive wheels for chips and cracks, backing pad for cracks, tear or excess wear, wire brush for loose or cracked wires. If power tool or accessory is dropped, inspect for damage or install an undamaged accessory. After inspecting and installing an accessory, position yourself and bystanders away from the plane of the rotating accessory and run the power tool at maximum no-load speed for one minute.** *Damaged accessories will normally break apart during this test time.*
9. **Wear personal protective equipment. Depending on application, use face shield, safety goggles or safety glasses. As appropriate, wear dust mask, hearing protectors, gloves and workshop apron capable of stopping small abrasive or workpiece fragments.** *The eye protection must be capable of stopping flying debris generated by various operations . The dust mask or respirator must be capable of filtrating particles generated by your operation. Prolonged exposure to high intensity noise may cause hearing loss.*
10. **Keep bystanders a safe distance away from work area. Anyone entering the work area must wear personal protective equipment.** *Fragments of workpiece or of a broken accessory may fly away and cause injury beyond immediate area of operation.*
11. **Position the cord clear of the spinning accessory.** *If you lose control, the cord may be cut or snagged and your hand or arm may be pulled into the spinning accessory.*
12. **Never lay the power tool down until the accessory has come to a complete stop.** *The spinning accessory may grab the surface and pull the power tool out of your control.*
13. **Do not run the power tool while carrying it at your side.** *Accidental contact with the spinning accessory could snag your clothing, pulling the accessory into your body.*
14. **Regularly clean the power tool's air vents.** *The motor's fan will draw the dust inside the housing and excessive accumulation of powdered metal may cause electrical hazards.*
15. **Do not operate the power tool near flammable materials.** *Sparks could ignite these materials.*
16. **Do not use accessories that require liquid coolants.** *Using water or other liquid coolants may result in electrocution or shock.*

Kickback and Related Warnings:

1. **Maintain a firm grip on the power tool and position your body and arm to allow you to resist kickback forces. Always use auxiliary handle, if provided, for maximum control over kickback or torque reaction during start-up.** *The operator can control torque reactions or kickback forces, if proper precautions are taken.*
2. **Never place your hand near the rotating accessory.** *Accessory may kickback over your hand.*
3. **Do not position your body in the area where power tool will move if kickback occurs.** *Kickback will propel the tool in direction opposite to the wheel's movement at the point of snagging.*
5. **Use special care when working corners, sharp edges etc. Avoid bouncing and snagging the accessory.** *Corners, sharp edges or bouncing have a tendency to snag the rotating accessory and cause loss of control or kickback.*
6. **Do not attach a saw chain woodcarving blade or toothed saw blade.** *Such blades create frequent kickback and loss of control.*

Safety Warnings Specific for Sanding Operations:

1. **Do not use excessively oversized sanding disc paper. Follow manufacturers recommendations, when selecting sanding paper.** *Larger sanding paper extending beyond the sanding pad presents a laceration hazard and may cause snagging, tearing of the disc or kickback.*

Safety Warnings Specific for Polishing Operations:

1. **Do not allow any loose portion of the polishing bonnet or its attachment strings to spin freely. Tuck away or trim any loose attachment strings.** *Loose and spinning attachment strings can entangle your fingers or snag on the workpiece.*

(continued on page 4)

Complete Right Angle Rotary Polisher Assembly

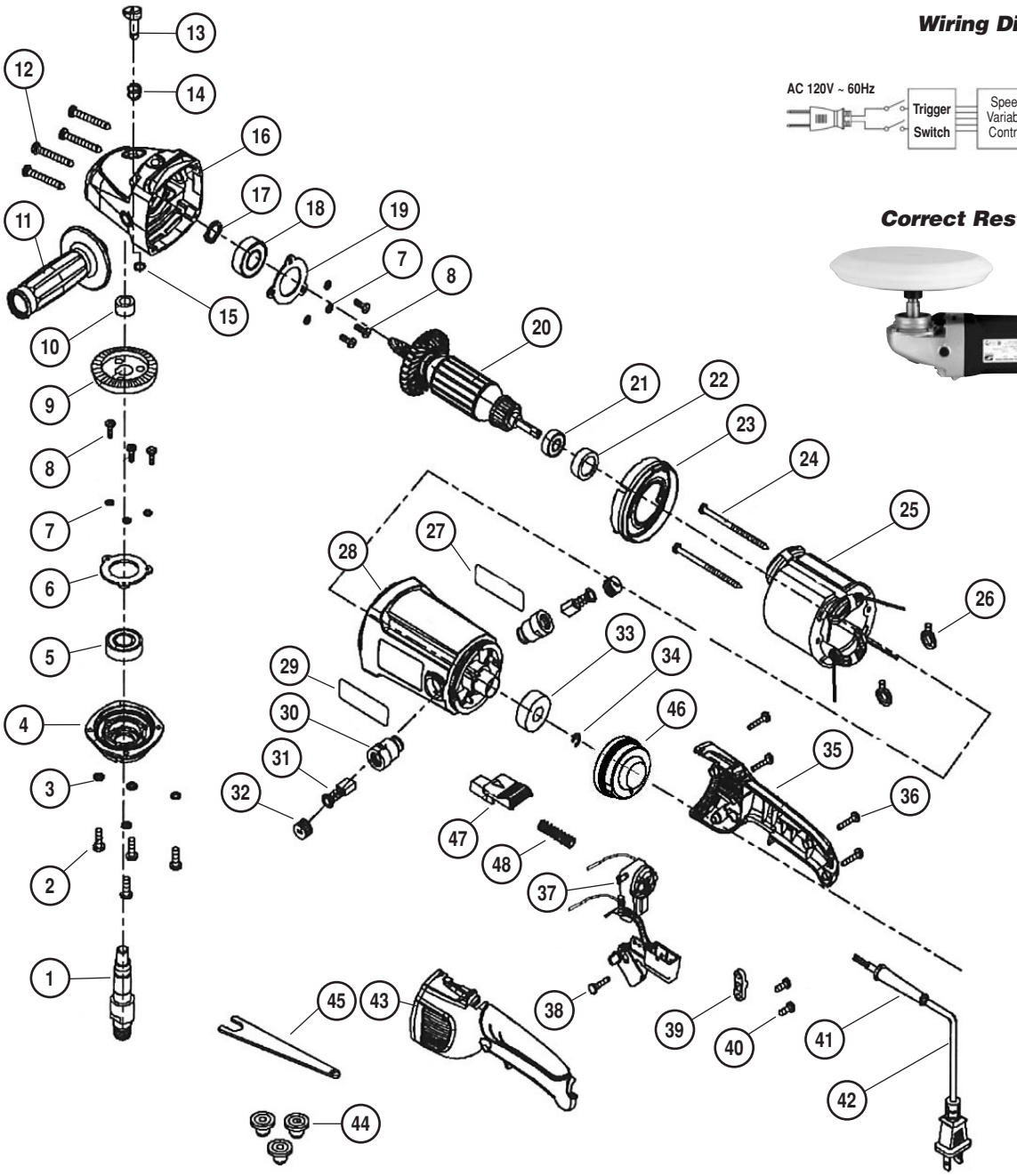

Wiring Diagram

Correct Resting Position



Index Key

No.	Part #	Description
1	**89371**	Spindle
2	**89437**	Screw (4)
3	**89438**	Washer (4)
4	**89439**	Gear Box Cover
5	**89452**	Bearing
6	**89375**	Bearing Cover
7	**89440**	Washer (6)
8	**89257**	Screw (6)
9	**89377**	Gear
10	**89378**	Bearing
11	**89441**	Side Handle
12	**89442**	Screw (4)
13	**89382**	Spindle Lock
14	**89383**	Spindle Lock Spring (4)
15	**89384**	Snap Ring
16	**89443**	Gear Box
17	**89386**	Circlip
18	**50677**	Bearing
19	**89387**	Bearing Cover
20	**89388**	Armature
21	**02649**	Bearing
22	**89447**	Bearing Bush
23	**89391**	Baffle
24	**89392**	Screw (2)
25	**89393**	Stator
26	**89394**	Ring Terminal (2)
27	**89395**	Label
28	**89448**	Housing
29	**89397**	Label
30	**89398**	Brush Holder (2)
31	**89399**	Carbon Brush (2)
32	**89421**	Brush Holder Cap (2)
33	**89422**	Magnetic Ring
34	**89423**	“E” Ring
35	**89433**	Handle Cover
36	**89450**	Screw (4)
37	**89426**	Speed Controller Switch
38	**89451**	Screw
39	**89427**	Cord Clamp
40	**89446**	Screw (2)
41	**89444**	Cord Sleeve
42	**89445**	Cord
43	**89436**	Handle
44	**89430**	Rubber Cap (3)
45	**89431**	Spanner
46	**89449**	Magnetic Ring Cover
47	**89434**	Button
48	**89435**	Spring

Definitions of Label Symbols

Symbol	Description
A	amperes
Hz	hertz
⧈	Class II Construction

Recommended Diameter of Accessories:

1. **The tool can use 7" Rubber Locking Pads or 7" – 9" Polishing Bonnets and Pads.**

Mounting of Sanding Pad:

1. **Turn tool off and disconnect from power supply. Insert the clamp washer though the sandpaper, phenolic disc and pad. Lock the spindle with the spindle lock and screw the pad onto the tool spindle until tight.**

Mounting of Polishing Pad:

1. **Turn tool off and disconnect from power supply. Fix the spindle with the blade lock, screw the backing pad onto the spindle and tighten. Place polishing pad on backing pad, engaging the hook and loop or cinch and tie the drawstring, depending on the type being used.**

Proper Support for the Workplace:

1. **Insure that the workpiece is fixed so that it cannot become a projectile.**

TOOL DESCRIPTION

Right Angle Rotary Polisher – Is a right angle rotary electric hand tool which includes: a variable speed on/off switch; side handle; a RPM Dial which maintains desired RPM, when under load; and is equipped with an 8 ft. cord set. The switch handle can be rotated 90˚ in relation to the spindle in either direction.

ASSEMBLY and OPERATION INSTRUCTIONS

1. With power source disconnected from tool, securely fasten abrasive/accessory on tool. The rated RPM of the accessory must be equal to or greater than the rated RPM of the tool.
2. Hold tool by the motor housing and the side handle. Do Not hold tool by head/housing assembly. Keep hands away from all polishing edges and moving parts.
3. Tool has variable RPM dial on top side of rear switch handle. Dial desired maximum RPM (see label B) and then proceed to follow step 4.
4. Squeeze variable speed on/off switch on rear switch handle to run tool. Tool's on/off switch may be used as a throttle to fluctuate RPM. To lock tool in "on" position continue to squeeze on/off switch and depress side button. Electronic module maintains specified speed even under load. To disengage tool when locked in "on" position push on/off switch inward.
5. To rotate the switch handle unlock by moving the slide with the thumb and rotate to desired orientation and make sure switch handle locks in place.

MAINTENANCE and ACCESSORY CARE INSTRUCTIONS

Important: A preventative maintenance program is recommended whenever portable power tools are used.

- Use only genuine Dynabrade replacement parts to insure quality. To order replacement parts, specify **Model #**, **Serial #** and **RPM** of your tool.

Routine Preventative Maintenance:

- Mineral spirits are recommended when cleaning. Do not use on electrical components or clean tool or parts with any solvents or oils containing acids, esters, ketones, chlorinated hydrocarbons or nitro carbons. Compressed air may be used to remove dirt from electrical components.
- DO NOT clean or maintain tools with chemicals that have a low flash point (example: WD-40®).
- Tool labels must be kept legible at all times, if not, reorder label(s) and replace. User is responsible for maintaining specification information i.e.: Model #, S/N, and RPM. (See Assembly Breakdown)
- Visually inspect plugs and cords for frays, visible damage and signs of deterioration. Damaged or worn components must be replaced by Dynabrade to avoid a safety hazard.
- Brush Changing – Unplug tool, remove brush caps and remove brushes. Install new brushes, and replace brush caps. Change brushes every 80 hrs. to ensure proper tool function.
- **After maintenance is performed on tool check for excessive tool vibration.**
- **Check for excessive current leakage at 550 volts with a current leakage checker on all screws and the gear case, if the electrical components have been disturbed during repair.**

Handling and Storage of Tool and Accessories:

- Use of tool rests, hangers and/or balancers is recommended.
- DO NOT carry tool by cord.
- Protect abrasive accessories from exposure to water, solvents, high humidity, freezing temperature and extreme temperature changes.
- Store accessories in protective racks or compartments to prevent damage.
- DO NOT rest tool on pad (see page 3 for a photo of the correct resting position).

Machine Specifications

Model Number	Motor RPM	Motor hp (w)	Voltage	Current	Phase	Frequency	Weight Pound (kg)	Length Inch (mm)	Height Inch (mm)
51580	0 - 3,000	1.1 (835)	120 V (AC)	11 Amp	1	60 Hz	7.8 (3.99)	19.2 (436)	5.35 (136)

One Year Warranty

Following the reasonable assumption that any inherent defect which might prevail in a product will become apparent to the user within one year from the date of purchase, all equipment of our manufacture is warranted against defects in workmanship and materials under normal use and service. We shall repair or replace at our factory, any equipment or part thereof which shall, within one year after delivery to the original purchaser, indicate upon our examination to have been defective. Our obligation is contingent upon proper use of Dynabrade tools in accordance with factory recommendations, instructions and safety practices. It shall not apply to equipment which has been subject to misuse, negligence, accident or tampering in any way so as to affect its normal performance. Normally wearable parts such as bearings, brushes, gears, etc., are not covered under this warranty.

Reference Contact Information

1. **CSA International**
   8501 East Pleasant Valley Road
   Cleveland, Ohio 4431-5575
   Tel: 1 (216) 524-4990
   Fax: 1 (216) 642-3463

2. **Government Printing Office – GPO**
   Superintendent of Documents
   Attn. New Orders
   P.O. Box 371954
   Pittsburgh, PA 15250-7954
   Tel: 1 (202) 512-1803

Visit Our Web Site: www.dynabrade.com

Email: Customer.Service@Dynabrade.com

DYNABRADE®

DYNABRADE, INC., 8989 Sheridan Drive • Clarence, NY 14031-1490 • Phone: (716) 631-0100 • Fax: 716-631-2073 • International Fax: 716-631-2524

©DYNABRADE, INC., 2009

PRINTED IN USA

PD09.46_09/09