PD08-30R
Effective February, 2018
Supersedes PD08•30

8" Random Orbital Polisher
Governor Controlled

Air Tool Manual – Safety, Operation and Maintenance

SAVE THIS DOCUMENT, EDUCATE ALL PERSONNEL

Models:

51570 – 2,800 RPM, 5/8"-11 Spindle
51571 – 2,800 RPM, M14 x 2 Spindle



Rotary Motion



3/4" Dia. Random Orbit



FIND THE MOST CURRENT OFFERING OF SUPPORT DOCUMENTS AND ACCESSORIES @ WWW.DYNABRADE.COM

⚠ WARNING

Read and understand this tool manual before operating your air tool. Follow all safety rules for the protection of operating personnel as well as adjacent areas. Always operate, inspect and maintain this tool in accordance with the American National Safety Institute (ANSI) Safety Code for Portable Air Tools – B186.1. For additional safety information, refer to Safety Requirements for the Use, Care and Protection of Abrasive Wheels – ANSI B7.1, Code of Federal Regulation – CFR 29 Part 1910, European Committee for Standards Hand Held Non-Electric Power Tools – Safety Requirements and applicable State and Local Regulations.

SAFETY LEGEND



⚠ WARNING

Carefully read and understand the General and Sander/Polisher sections found in Tool Safety & Operating Guidelines (PN00001676) before handling or using tool.

⚠ WARNING

Practice safety requirements. Work alert, have proper attire, and do not operate tools under the influence of alcohol or drugs.





⚠ WARNING

Eye protection must be worn at all times, eye protection to conform to ANSI Z87.1.

⚠ WARNING

Ear protection to be worn when exposure to sound, exceeds the limits of applicable Federal, State or local statues, ordinances and/or regulations.





Respiratory protection to be used when exposed to contaminants that exceed the applicable threshold limit values required by law.

⚠ WARNING

Air line hazard, pressurized supply lines and flexible hoses can cause serious injury. Do not use damaged, frayed or deteriorated air hoses and fittings.



⚠ WARNING

Some dust created by sanding, grinding, drilling, and other construction activities contain chemicals known to cause cancer, birth defects or other reproductive harm. Some examples of these chemicals are:

- Lead from lead-based paints
- Crystalline silica from bricks and cement and other masonry products
- Arsenic and chromium from chemically treated lumber

Your risk from these exposures varies, depending on how often you do this type of work. To reduce your exposure to these chemicals: work in a well ventilated area, and work with approved safety equipment, such as those dust masks that are specially designed to filter out microscopic particles.

SAFETY INSTRUCTIONS

Carefully Read all instructions before operating or servicing any Dynabrade® Abrasive Power Tool.
Products offered by Dynabrade are not to be modified, converted or otherwise altered from the original design without expressed written consent from Dynabrade, Inc.

Tool Intent: 8" Random Orbital Polishers are ideal for buffing and polishing of materials using properly speed-rated (RPM) cleaning and polishing accessories.

Do not use tool for anything other than its intended applications.
This power tool is not intended for use in potentially explosive atmospheres and is not insulated against contact with electrical power.

Training: Proper care, maintenance, and storage of your tool will maximize performance.

- Employer's Responsibility – Provide 8" Random Orbital Polisher operators with safety instructions and training for safe use of tools and accessories.

Accessory Selection:

- Abrasive/accessory RPM (speed) rating MUST be approved for AT LEAST the tool RPM rating.
- Before mounting an accessory, visually inspect for defects. Do not use defective accessories.
- Use only recommended accessories. Do Not use grinding wheels or cut-off wheels. See back page of manual and Dynabrade catalog.
- Follow tool specifications before choosing size and type of accessory.
- Only use recommended fittings and air line sizes. Air supply hoses and air hose assemblies must have a minimum working pressure rating of 150 PSIG (10 Bars, g) or 150 percent of the maximum pressure produced in the system, whichever is higher. (See tool Machine Specifications table.)

OPERATING INSTRUCTIONS

Warning: Always wear eye protection. Operator of tool is responsible for following: accepted eye, face, respiratory, hearing and body protection.

Caution: Hand, wrist and arm injury may result from repetitive work, motion and overexposure to vibration. Vibration level (m/s^2): 3.44. Vibration level was established using ISO 8662-12 with a 70 gram buff attached. Accessories with greater mass will increase vibration levels.

- Keep hand and clothing away from working end of the air tool.
- Working end of the air tool has potential hazard of cutting and severing.

Operation: Be sure that any loose clothing, hair and all jewelry is properly restrained.

- Secure inlet bushing on air tool with a wrench before attempting to install the air fitting to avoid damaging housing assembly.
- BEFORE MOUNTING AN ACCESSORY, after all tool repairs and whenever a 8" Random Orbital Polisher is issued for use, check tool RPM (speed) with tachometer with air pressure set at 90 PSIG while the tool is running. If tool is operating at a higher speed than the RPM marked on the tool housing, or operating improperly, the tool must be serviced and corrected before use.

Caution: Tool RPM must never exceed abrasive/accessory RPM rating. Check accessory manufacturer for details on maximum operating speed or special mounting instructions.

- With power source connected at the air tool relieve hose of air pressure and disconnect tool from air supply when changing recommended accessories.
- Connect air tool to power source. Be careful NOT to depress throttle lever in the process.
- Do not expose air tool to inlet pressure above 90 PSIG or (6.2 Bars).

Caution: After installing the accessory, before testing or use and/or after assembling tool, the 8" Random Orbital Polisher must be started at a reduced speed to check for good balance. Gradually increase tool speed. DO NOT USE if tool vibration is excessive. Correct cause, and retest to insure safe operation.

- Release the throttle lever in case of an interruption of the energy supply.
- Ensure that self-fixing accessories are mounted concentrically.
- Make sure that work area is uncluttered, and visitors are at a safe range from the tools and debris. Potentially explosive atmospheres can be caused by dust and fumes resulting from sanding or grinding. Always use dust extraction or suppression systems which are suitable for the material being processed.
- Proceed with caution in unfamiliar surroundings. Hidden hazards may exist, such as electricity or other utility lines.
- Air tools are not intended for use in explosive atmospheres and are not insulated for contact with electric power sources.
- Use a vise or clamping device to hold work piece firmly in place.
- Work may generate hazardous dust.
- Do not apply excessive force on tool or apply “rough” treatment to it.
- Always work with a firm footing, posture and proper lighting.
- Ensure that sparks and debris resulting from work do not create a hazard.
- This tool is rear exhaust. Exhaust may contain lubricants, vane material, bearing grease, and other materials flushed thru the tool.

Report to your supervisor any condition of the tool, accessories, or operation you consider unsafe.

Air System

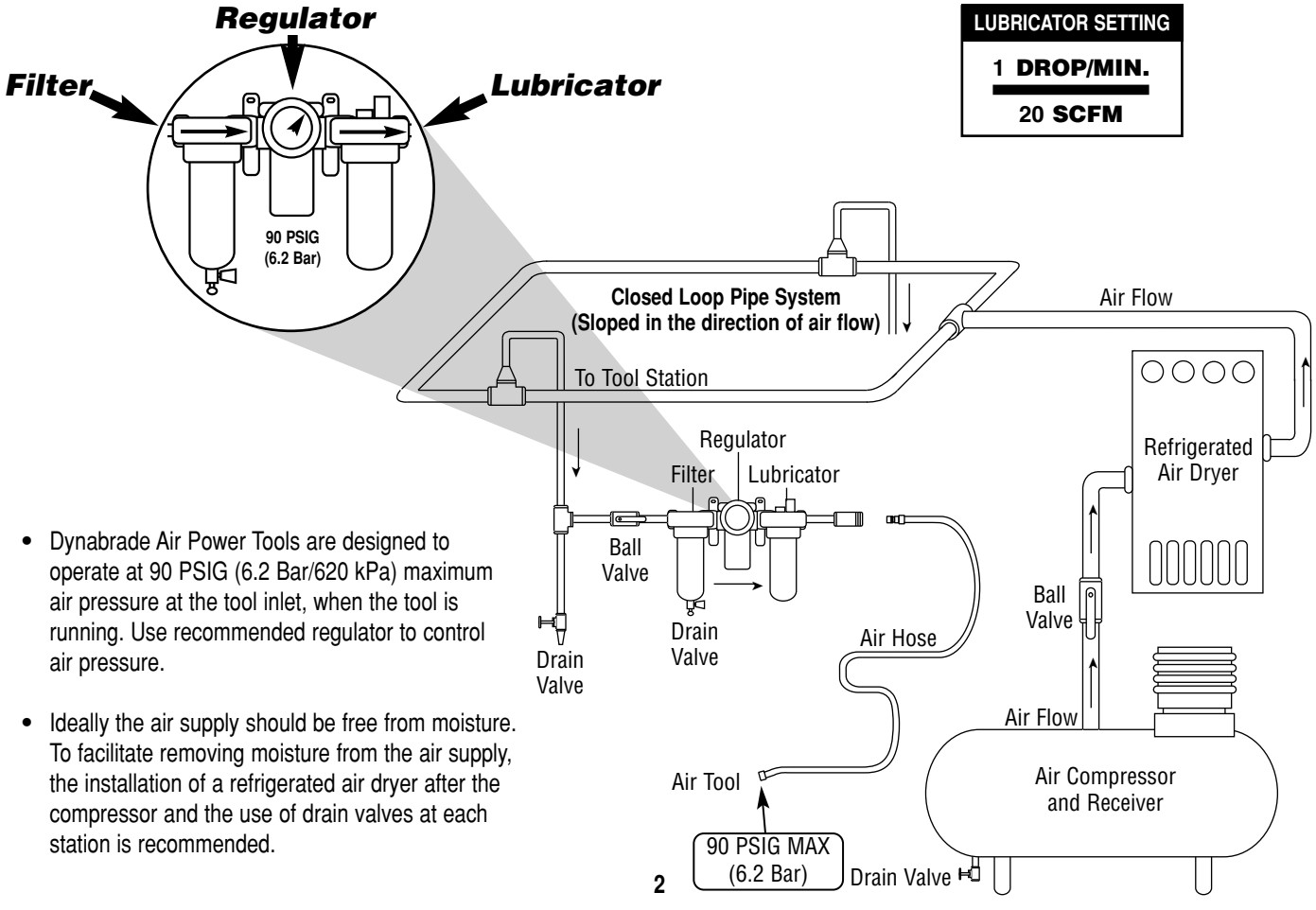

- Dynabrade Air Power Tools are designed to operate at 90 PSIG (6.2 Bar/620 kPa) maximum air pressure at the tool inlet, when the tool is running. Use recommended regulator to control air pressure.
- Ideally the air supply should be free from moisture. To facilitate removing moisture from the air supply, the installation of a refrigerated air dryer after the compressor and the use of drain valves at each station is recommended.

Maintenance Instructions

Important: To keep tool safe a preventative maintenance program is recommended whenever portable power tools are used. The program should include inspection of air supply lines, air line pressure, proper lubrication and repair of tools. Refer to ANSI B186.1 for additional maintenance information.

- Use only genuine Dynabrade replacement parts to insure quality. To order replacement parts, specify **Model#**, **Serial#** and **RPM** of your air tool.
- It is strongly recommended that all Dynabrade rotary vane air tools be used with a Filter-Regulator-Lubricator to minimize the possibility of misuse due to unclean air, wet air or insufficient lubrication. Dynabrade recommends the following: **10681** Air Filter-Regulator-Lubricator (FRL) – Provides accurate air pressure regulation and two stage filtration of water contaminants.
- Lubricate wick system through the angle gear oil fitting with **2-3 plunges** for **every 8 hours of use**, to achieve maximum gear life. **Important:** Use only the recommended angle gear oil for the wick system. Do not contaminate the wick with any other oil or grease product (order **95848** Gear oil and **95541** Gun).
- Grease the planetary gear assembly with the **95544** Grease by applying **2-3 plunges** with the **95541** Grease Gun after **every 50 hours** of use for maximum gear life.
- Dynabrade recommends one drop of air lube per minute for each 20 SCFM (example: if the tool specification states 40 SCFM, set the drip rate on the filter-lubricator to 2 drops per minute). Dynabrade Air Lube (P/N **95842**: 1 pt 473 ml) is recommended.

Routine Preventative Maintenance:

- Check free speed of 8" Random Orbital Polisher using a tachometer. This governor controlled right-angle random orbital polisher should be speed checked every 20 hours of use or weekly, whichever occurs more frequently.
- BEFORE MOUNTING AN ACCESSORY, after all tool repairs and whenever a 8" Random Orbital Polisher is issued for use, check tool RPM (speed) with tachometer with air pressure set at 90 PSIG while the tool is running. If tool is operating at a higher speed than the RPM marked on the tool housing, or operating improperly, the tool must be serviced and corrected before use.
- DO NOT disassemble the governor for any reason. Reorder correct speed – governor assembly (See Assembly Breakdown) and recheck free speed of tool with a tachometer.
- Mineral spirits are recommended when cleaning the tool and parts. Do not clean tool or parts with any solvents or oils containing acids, esters, ketones, chlorinated hydrocarbons or nitro carbons.
- DO NOT clean or maintain tools with chemicals that have a low flash point (example: WD-40®).
- A Motor Tune-Up Kit (P/N **96532**) is available which includes high wear and medium wear motor parts.
- Air tool labels must be kept legible at all times, if not, reorder label(s) and replace. User is responsible for maintaining specification information i.e.: Model #, S/N, and RPM. (See Assembly Breakdown)
- Blow air supply hose out prior to initial use.
- Visually inspect air hoses and fittings for frays, visible damage and signs of deterioration. Replace damaged or worn components.

After maintenance is performed on tool, add a few drops of Dynabrade Air Lube (P/N **95842**) to the air line and start the tool a few times to lubricate air motor. Check for excessive tool vibration.

Handling and Storage:

- DO NOT rest tool on pad. (See Tool Resting Position Diagram)
- Use of tool rests, hangers and/or balancers is recommended.
- Protect tool inlet from debris (see Notice below).
- DO NOT carry tool by air hose, or near the tool throttle lever.
- Protect abrasive accessories from exposure to water, solvents, high humidity, freezing temperature and extreme temperature changes.
- Store accessories in protective racks or compartments to prevent damage.

Tool Resting Position:

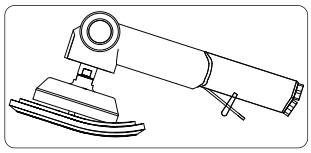

INCORRECT Resting Position

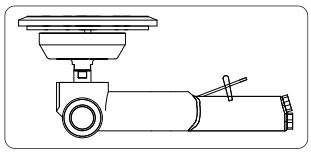

CORRECT Resting Position

Machine Specifications

Model Number	Motor HP (W)	Tool RPM	Air Inlet Thread	Air Flow Rate SCFM (LPM)	Air Pressure PSIG (Bars)	Spindle Thread	Weight Pound (kg)	Length Inch (mm)	Height Inch (mm)
51570	1 (746)	2,800	3/8" NPT	41 (1,167)	90 (6.2)	5/8"-11	5.8 (2.7)	14-3/8 (366)	5-3/8 (135)
51571	1 (746)	2,800	3/8" NPT	41 (1,167)	90 (6.2)	M14 x 2	5.8 (2.7)	14-3/8 (366)	5-3/8 (135)

Additional Specifications: Hose I.D. Size 3/8" (10 mm) • Air Flow Rate Based At Max HP • Air Pressure 90 PSIG Max
Visit dynabrade.com for your model's vibration and sound data.

Notice

All Dynabrade motors use the highest quality parts and materials available and are machined to exacting tolerances. The failure of quality pneumatic motors can most often be traced to an unclean air supply or the lack of lubrication. Air pressure easily forces dirt or water contained in the air supply into motor bearings causing early failure. It often scores the cylinder walls and the rotor blades resulting in limited efficiency and power. Our warranty obligation is contingent upon proper use of our tools and cannot apply to equipment which has been subjected to misuse such as unclean air, wet air or a lack of lubrication during the use of this tool.

LIFETIME WARRANTY

To validate Dynabrade Lifetime Warranty, you must register each tool at: www.dynabrade.com. Registration of each tool at website is required. Dynabrade will not honor Lifetime Warranty on unregistered tools. Please view the entire Lifetime Warranty Policy at www.dynabrade.com.

8" Random Orbital Polisher

Index Key

No.	Part #	Description
1	**96188**	Screw
2	**94594**	Washer (2)
3	**50855**	Pad
4	**94595**	Spacer
5	**95235**	Screw (3)
6	**61392**	Shaft Balancer
7	**61389**	Screw
8	**61387**	Counterweight
9	**56052**	Bearing
10	**61398**	Locking Pin Bushing
11	**61395**	Switch Spring
12	**61393**	Pin
13	**61397**	Spring
14	**61396**	Locking Pin Insert
15	**92517**	Screw (4)
16	**61388**	Counterweight
17	**61386**	Counterweight
18	**61394**	Switch Shaft
19	**61390**	Housing - 5/8"-11
	61391	Housing - M14 x 2
20	**50963**	Retainer
21	**50899**	Seal
22	**53603**	Spindle - 5/8"-11
	53606	Spindle - M14 x 2
23	**97679**	Bearing
24	**97678**	Shim
25	**97677**	Shim (2)
26	**53637**	Gear Set
27	**53608**	Wick
28	**53600**	Right Angle Housing Assy. Includes the following: A **96325** Shell Bearing B **53649** Gear Oil Plate C **01041** Gear Oil Fitting
29	**53163**	Side Handle
30	**01266**	Bearing
31	**53635**	Pinion Adapter
32	**51969**	Coupling Nut (2)
33	**50902**	Coupling Insert
34	**53650**	Lock Ring
35	**53651**	Spacer
36	**96498**	Wave Spring (2)
37	**95438**	O-Ring
38	**53620**	Adapter
39	**54520**	Bearing (2)
40	**04014**	Set Screw
41	**01041**	Grease Fitting
42	**53695**	Gear Casing
43	**53669**	Carrier
44	**53195**	Gear (2)
45	**04026**	Needle Bearing (4)
46	**53679**	Shaft (2)
47	**53665**	Ring Gear
48	**51951**	Shim Pack (3/Pkg.)
49	**51922**	Front Bearing Plate
50	**96441**	Pin (2)
51	**51927**	Spacer
52	**53666**	Rotor
53	**51926**	Blade (4/Pkg.)
54	**51925**	Cylinder
55	**51923**	Rear Bearing Plate
56	**02057**	Bearing
57	**96445**	Pin (2)
58	**51924**	Gasket
59	**51933**	Governor Assembly
60	**All Housings Include:** Warning & Specification Labels	
	20036	Housing – Model **51570**
	20037	Housing – Model **51571**
61	**96444**	Pin
62	**51949**	Safety Lever Assembly
63	**51946**	Valve Stem Assembly (Incl. **96443** O-Ring)
64	**51945**	Valve Seat
65	**51944**	Tip Valve
66	**51943**	Spring
67*	**96442**	O-Ring
68*	**51940**	Spacer
69	**53682**	Gasket - Standard
	53687	Gasket - Overhose Version
70*	**94528**	Felt Silencer
71*	**53686**	Muffler Cap
72*	**94924**	Wave Spring
73*	**53683**	Spacer
74*	**53681**	Inlet BushinG (Incl. 2 – **51938** Screens)

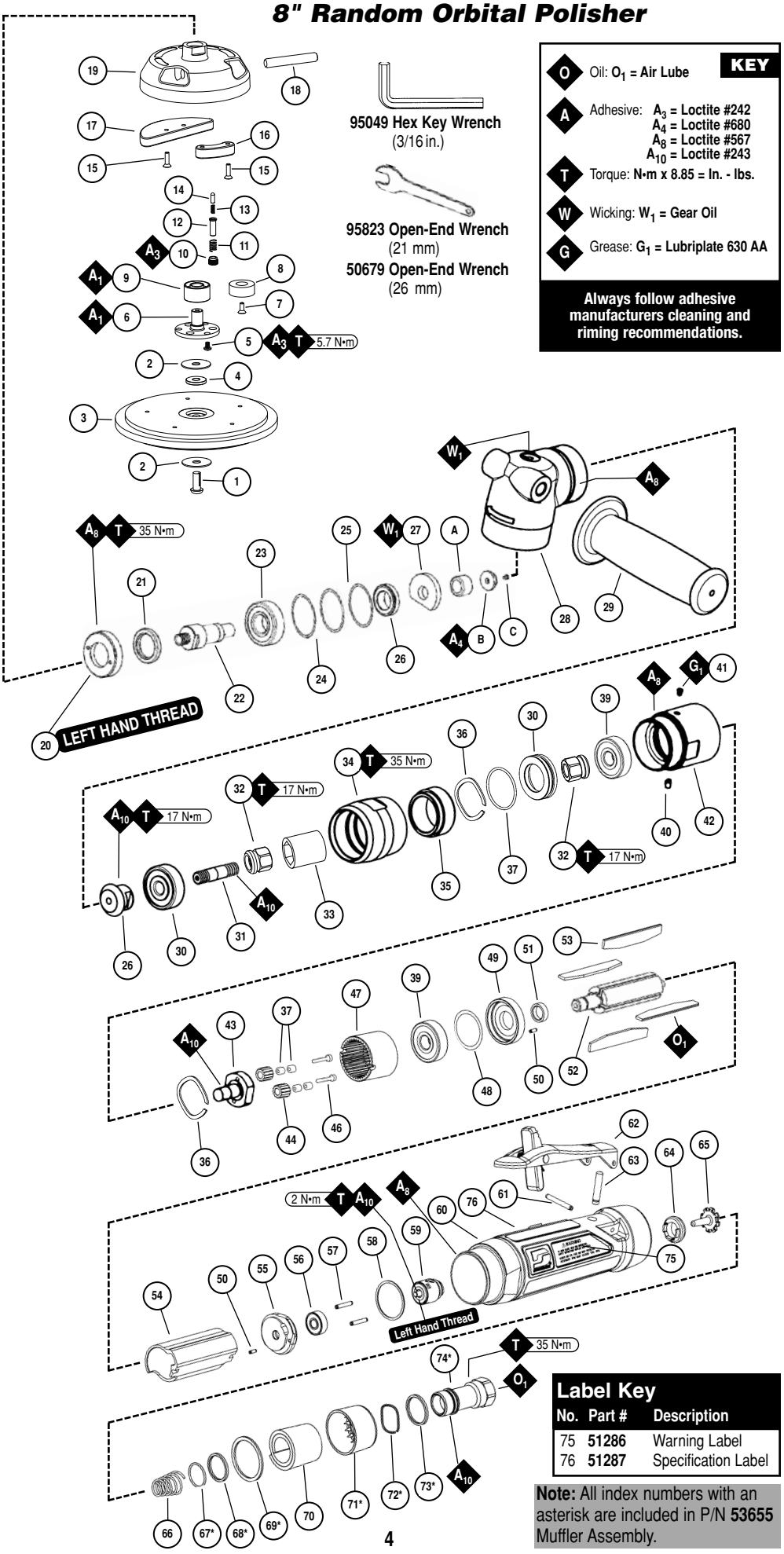

Label Key

No.	Part #	Description
75	**51286**	Warning Label
76	**51287**	Specification Label

Note: All index numbers with an asterisk are included in P/N **53655** Muffler Assembly.

Disassembly Instructions

Important: Manufacturer's warranty is void if tool is disassembled before warranty expires.
Disconnect tool from power source before tool repair.

Orbital Head Disassembly:

1. Slide **61394** Switch Shaft to the random (lock) position. Use the **95823** 21mm wrench to hold the orbital head in position and removed the **96188** Screw with the **95049** 3/16" hex key.
2. Hold the **18552** Housing in a vise with bronze or aluminum jaws so the orbital head assembly is facing up.
3. Apply localized heat to the three **95235** Screws and use a 9/64" hex key to remove these.
4. Apply localized heat to the **57069** Balancer Shaft and remove the shaft along with the **56052** Bearing.
5. Use the **96346** 2" Bearing Separator and the **96232** #2 Arbor Press to remove the **56052** Bearing from the **57069** Balancer Shaft.
6. Apply localized heat to **61398** Locking Pin Bushing and use **96364** Slotted screwdriver to remove.
7. Remove **61935** Switch Spring, **61393** Pin, **61397** Spring, and **61396** Locking Pin Insert.
8. Remove **61394** Switch Shaft from Orbital Head Housing.
9. Use the **95823** 21mm Wrench to remove the orbital head from the spindle.

Orbital Head Disassembly Complete.

Right Angle Head Disassembly:

1. Remove side handle and orbital head assembly.
2. Secure **53600** Right Angle Housing, against both side handle bosses, in a padded vise with spindle facing upward.
3. Using **97782** Pin Wrench (*ordered separately*) or an adjustable pin wrench, remove **50963** Retainer. (**Left Hand Threads**)
4. Remove **50899** Shaft Seal from retainer.
5. Pull spindle and gear assembly from housing.
6. Press spindle through **97679** Bearing and spiral bevel gear.
7. Remove shims and **53608** Wick from right angle housing.
8. Remove **53650** Lock Ring from right angle housing (**Left Hand Threads**) and from **53695** Gear Casing (**Right Hand Threads**).
9. Remove angle head from vise and remove **96325** Bearing by pressing **53649** Gear Oil Plate through housing.
10. Pull pinion gear, bearing and coupler sub-assembly from angle housing.
11. Secure gear, bearing and coupler sub-assembly by the pinion gear wrench flats and remove the **50902** Coupling Insert (twist counterclockwise).
12. Secure **53635** Adapter using an allen wrench and remove pinion gear (twist counterclockwise).
13. Press **53635** Adapter through **01266** Bearing.
14. Remove **04014** Set Screw from **53695** Gear Casing and remove gear casing (**Right Hand Thread**) from motor housing.
15. Slide **53665** Ring Gear from gear casing.
16. Secure planetary carrier using **53698** Wrench (*ordered separately*) and remove **51969** Coupling (twist counterclockwise).
17. Press planetary carrier thread end through **54520** Bearing.
18. Remove **96498** Wave Spring.
19. Press **53679** Pins from carrier to remove gears.

Right Angle Head Disassembly Complete.

Motor Disassembly:

1. Remove **53651** Spacer and **96498** Wave Spring from housing assembly.
2. Pull motor assembly from housing.
3. Remove **53620** Motor Adapter with **95438** O-Ring. **Note:** Step 3 applies to 4,500 RPM models only.
4. Remove governor assembly by using a slotted screwdriver. (**Left Hand Thread**)
5. Secure **51925** Cylinder using **96209** Motor Repair Clamp (*ordered separately*) and place a 1/8" (3 mm) drift pin to the base of the terminal thread and press **51921** Rotor from the **02057** Rear Bearing.
6. Slide **02057** Rear Bearing from **51923** Rear Bearing Plate.
7. Remove **51925** Cylinder and **51926** Blades.
9. Press rotor through **54520** Bearing, **51922** Front Bearing Plate and **51927** Rotor Spacer.
10. Slide **54520** Bearing and shims from **51922** Front Bearing Plate.

Motor Disassembly Complete.

Housing Disassembly:

1. Secure housing using **51989** Repair Collar (*see back cover for Optional Accessories*).
2. Remove inlet bushing with muffler assembly (twist counterclockwise).
3. Remove **53682** Gasket, **51943** Spring, **96442** O-Ring, **51940** Spacer, **94528** Felt Silencer, **53686** Muffler Cap, **94924** Wave Spring and **53683** Spacer from **53681** Inlet Bushing.
4. Remove **51944** Tip Valve and **51945** Valve Seat.
5. Remove housing and **51989** Repair Collar and lay collar on bench with flange facing down so it is supporting throttle lever. Place a 3/32" (3 mm) drift pin on **96444** Pin and tap pin thru housing.
6. Remove **51946** Valve Stem Assembly.
7. Remove **96443** O-Ring from **51946** Valve Stem Assembly.

Housing Disassembly Complete.

Assembly Instructions

Motor Assembly:

Important: Be sure parts are clean and in good repair before assembling. Follow grease, oil and torque specifications.

1. Place rotor into a padded vise with gear teeth or male thread facing upwards.
2. Slip **51927** Rotor Spacer over rotor shaft and down against rotor body face.
3. Press **96441** Coiled Pin into **51922** Front Bearing Plate. Make certain, coiled pin does not protrude beyond internal bearing surface.
4. Place a .002" shim into the base of **51922** Front Bearing Plate as an initial spacing and slide **54520** Bearing to the front plate base. **Note: 51951** Shim Pack contains 001" and .002" shims.
5. Slip bearing/bearing plate assembly onto rotor. Add one drop of Loctite® #243 (or equiv.) to **51921** Rotor 3/8-24 male thread and screw **51969** Coupling Nut into place (Torque to 17 N•m 150 lb.-in.). **Note:** Step 5 applies to 4,500 RPM models only, omit step 6.
6. Press Bearing/Bearing Plate assembly onto rotor.
7. Check clarence between rotor and front bearing plate by using a .001" feeler gauge. Clarence should be between .001" – .0015". Adjust clarence by repeating steps 4,5 and 6 with different shims if necessary.
8. Once proper rotor gap clarence is achieved, install well lubricated **51926** Blades (4) into rotor slots. Dynabrade recommends lubricating blades with **95842** Air Lube.
9. Install **51925** Cylinder over rotor and front plate raised boss. Align coiled pin on front plate to cylinder slot.
10. Press **96441** Coiled Pin into blind hole on **51923** Rear Bearing Plate. Press (2) **96445** Coiled Pins into the back side of rear bearing plate.
11. Peel backing off **51924** Gasket and apply it firmly in place onto **51923** Rear Bearing Plate.
12. Place **51923** Rear Bearing Plate over rotor mandrel and insert raised boss on rear bearing plate into cylinder diameter, while inserting short coiled pin into cylinder slot. Be sure inlet slot on rear bearing plate lines up with inlet slot on cylinder. To correct alignment flip cylinder end to end and repeat step 9 for correct assembly.

(continued on next page)

Assembly Instructions - *(Continued)*

Important: Manufacturer's warranty is void if tool is disassembled before warranty expires.
Please refer to parts breakdown for part identification.

13. Using **96243** Bearing Press Tool (*ordered separately*) press **02057** Bearing onto rotor and into **51923** Rear Bearing Plate hole until it is seated. **Important:** Cylinder must fit snug between bearing plates. If too tight, rotor will not turn freely. Rotor must be lightly tapped at press fit end until rotor spins freely while still maintaining a snug fit. A loose fit will not achieve the proper preload on motor. While pressing **02057** Bearing, make certain to contact inner race of bearing.
14. Add one drop of Loctite® 243 (or equiv.) to governor assembly male thread and screw governor assembly into place (**Left Hand Thread**) with slotted screw head. Torque to 2 N•m (18 lb.-in.).
15. Install motor assembly into housing, making sure motor drops all the way into housing. **Note:** Align both **96445** Coiled Pins to slots in insert and against **51924** Gasket.

Motor Assembly Complete.

Right Angle Head Assembly:

1. Press **01041** Gear Oil Fitting into **53649** Gear Oil Plate. Apply a drop of Loctite® #680 (or equiv) to the diameter of the gear oil plate and insert sub-assembly into right angle housing.
2. Press **96325** Bearing into housing until it is firmly seated against **53649** Gear Oil Plate. **Important:** While pressing **96325** Bearing, make certain to contact outer race of bearing only.
3. Add one drop of Loctite® #243 (or equiv.) to male thread of **53635** Adapter and tighten pinion using a 3/16" Hex Key wrench and the pinion wrench flats. Torque to 17 N•m (150 lb.- in.).
4. Using **96244** Bearing Press Tool (*ordered separately*) press **53635** Adapter into **01266** Bearing. **Important:** While pressing **01266** Bearing, make certain to contact inner race of bearing only.
5. Add one drop of Loctite® #243 (or equiv.) to male thread of adapter and tighten **51969** Coupling Nut using wrench flats. Torque to 17 N•m (150 lb.- in.).
6. Insert sub-assembly into male threaded end of **53600** Right Angle Housing.
7. Apply a small amount of Loctite® #567 (or equiv.) to **53600** Right Angle Housing thread, and install **53650** Lock Ring (**Left hand Threads**).
8. Install **53665** Ring Gear over **54520** Front Motor Bearing, keeping 2 slots facing outward.
9. Install gears with needle bearings and assemble onto planetary carrier by pressing retainer shafts into place.
10. Place **96498** Wavy Washer at the base of **53695** Gear Casing female threaded end.
11. Slide planetary carrier assembly, with threaded end first, into **53695** Gear Casing and through **54520** Bearing.
12. Apply one drop of Loctite® #243 (or equiv.) to threads of **51969** Coupling Nut. Secure planetary carrier using **53698** Wrench (*order separately*) and thread on **51935** Coupling (twist clockwise). Torque to 17 N•m (150 lb.-in.).
13. Apply a small amount of Loctite® #567 (or equiv.) to male thread of motor housing and thread **53695** Gear Casing over ring gear and onto motor housing. **Important:** Align rotor spline into planet gears to allow carrier to spin freely.
14. When slots from ring gear line up with set screw hole, apply a small amount of Loctite® #567 (or equiv.) to male thread of **04014** Set Screw, and install set screw to lock ring gear in place.
15. Torque **53695** Gear Casing to 35 N•m (310 lb.-in.).
16. Place **50902** Coupling Insert into **51969** Coupling Nut. Make certain insert radii in coupling base, to correct alignment remove insert and rotate 90˚.
17. Secure **53600** Right Angle Housing, against both side handle bosses, in a padded vise.
18. Rotate motor housing/gear casing and **53650** Lock Ring until throttle lever is located between the 6-9 o'clock position. Throttle lever in this position safe guards against accidental start ups of the tool. Torque lock ring to 35 N•m (310 lb.-in.).
19. Place well lubricated **53608** Wick against **96325** Bearing with flat edge towards pinion gear. (Wick must be completely saturated with Dynabrade **95848** Gear Oil before installation). **Note:** Do not contaminate wick with any other oil or grease product.
20. Press **97679** Bearing onto spindle and against shoulder. **Important:** While pressing **97679**, make certain to contact inner race of bearing only.
21. Press gear, with teeth facing away from bearing, into spindle and against **97679** Bearing inner race.
22. Insert spindle assembly into **53600** Right Angle Housing until **97679** Bearing contacts housing shoulder.
23. Rotate spindle while pressing down into housing to check for gear alignment and backlash. Install shims as required (minimum backlash is recommended for maximum gear life. Make certain there is clarence throughout 360˚ revolution).
24. Press **50899** Shaft Seal into **50963** Retainer with base of seal facing outward.
25. Apply a small amount of Loctite® #567 (or equiv.) to the male thread of the retainer and thread into place. (**Left Hand Thread**)
26. Using **97782** Pin Wrench (*ordered separately*) or an adjustable pin wrench, torque retainer to 35 N•m (310 lb.-in.).

Housing Assembly:

1. Secure housing using **51989** Repair Collar (*see back cover for Optional Accessories*) with inlet facing upward.
2. Slide **96443** O-Ring onto **51946** Valve Stem and slide sub-assembly until o-ring passes through housing hole. Make certain valve stem assembly slides freely after the o-ring passes through the hole.
3. Install **51945** Valve Seat by aligning 3 male prongs with three deep slots on insert. Make certain valve seat is pressed flat against base of pocket. **Note:** Add a few drops of Dynabrade Air Lube (P/N **95842**) to pocket walls before inserting **51945** Valve Seat.
4. Install **51944** Tip Valve as shown.
5. Pre-assemble muffler, slide **53683** Spacer over **53681** Inlet Bushing and up against the hex head base. Slide **94924** Wave Spring over **53681** Inlet Bushing and up against spacer. Pre roll **94528** Felt and install it in **53686** Muffler Cap. Support felt in felt/muffler cap assembly and slide **53681** Inlet Bushing thru the inside until the muffler cap assembly seats against the **94924** Wave Spring. Flare the felt and place **51940** Spacer over male thread and set **96442** O-Ring into groove at the base of thread. Return felt to unflared form. Slide **51943** Spring into bushing and up to the two **51938** screens.
6. Place **53682** Gasket over felt silencer and against **53686** Muffler Cap.
7. Apply one drop of Loctite® #243 (or equiv.) to **53681** Inlet Bushing Thread.
8. Align small inside diameter of **51943** Spring to cone point on **51944** Tip Valve and thread inlet bushing and sub-assembly into place. Torque bushing to 35 N•m (310 lb.- in.).
9. Remove housing from **51989** Repair Collar and place repair collar onto the bench top with the part number identifier against the bench. Align the throttle lever holes to housing pinhole and rest the housing and throttle lever onto the legs of the repair collar. Press **96444** Coiled Pin into lever hole and center into housing.

Orbital Head Assembly:

1. Slide **61394** Switch Shaft into the housing so that it is in the rotary (unlock) position.
2. Install **61935** Switch Spring, **61393** Pin, **61397** Spring, and **61396** Locking Pin Insert.
3. Apply a small amount of the Loctite #242 (or equivalent) to the external threads of **61398** Locking Pin Bushing and install into the orbital head using the **96364** Slotted screwdriver.
4. Wipe all oil and grease for the outside diameter of the **57069** Balancer Shaft with a clean cloth. Wipe all oil and grease from the inside diameter of the **56052** Bearing.
5. Apply a small amount of the Loctite #609 (or equivalent) to the outside diameter of the **57069** Balancer Shaft.
6. Place the **57069** Balancer Shaft on the tool plate of the **96232** #2 Arbor Press. Position the sealed side of the **56052** Bearing on the balancer shaft and use the **57091** Bear Press Tool to install the bearing onto the balancer shaft.
7. Wipe all oil and grease from the outside diameter of the **56052** Bearing and the bearing pocket of the orbital head. Apply a small amount of the Loctite #609 (or equivalent) to the outside diameter of the bearing and install the balancer shaft and the bearing into the orbital head
8. Apply a small amount of the Loctite #242 (or equivalent) to the threads of the three **95235** Screws and install these into the orbital head (Torque to 5.7 N•m/50lb-in.).
9. Use the **95823** 21mm Wrench to install the orbital head assembly on the spindle.
10. Slide **61394** Switch Shaft to the lock position.
11. Assemble the washers and spacer as shown on page 4 and place the backing pad on the **57069** Balancer Shaft. Use the **95823** 21mm Wrench to hold the head stationary while installing the **96168** Screw with a 3/16" hex key (Torque to 11.3 N•m/100lb-in.).
12. Connect the polisher to the air supply hose and check for the proper operation.

Tool Assembly Complete. Please allow 30 minutes for adhesives to cure before operating tool.

Important: Before operating, place 2-3 drops of Dynabrade Air Lube (P/N **95842**) directly into inlet with throttle lever depressed. Operate tool for 30 seconds to allow air lube to properly lubricate internal motor components. Motor should now be tested for proper operation at 90 PSIG max. If tool operates at a higher RPM than marked on the tool or if vibration and sound levels seem abnormal, the tool should be serviced to correct the cause before use.

Loctite® is a registered trademark of Loctite Corp.

Preventative Maintenance Schedule

For All 1hp 8" Random Orbital Polishers

This service chart is published as a guide to expectant life of component parts. The replacement levels are based on average tool usage over one year. Dynabrade Inc. considers one year usage to be 1,000 hours.

Parts Common to all Models:

Index #	Part Number	Description	Number Required	High Wear 100%	Medium Wear 70%	Low Wear 30%	Non-Wear 10%
1	**96188**	Screw	1		X		
2	**94594**	Washer	2		X		
3	**50855**	Pad	1	N/A	N/A	N/A	N/A
4	**94595**	Spacer	1				X
5	**95235**	Screw	3			X	
6	**61392**	Shaft Balancer	1			X	
7	**61389**	Screw	1			X	
8	**61387**	Counterweight	1				X
9	**56052**	Bearing	1			X	
10	**61398**	Locking Pin Bushing	1			X	
11	**61395**	Switch Spring	1			X	
12	**61393**	Pin	1			X	
13	**91397**	Spring	1			X	
14	**61396**	Locking Pin Insert	1			X	
15	**92517**	Screw (4)	4			X	
16	**61388**	Counterweight	1				X
17	**61386**	Counterweight	1				X
18	**61394**	Switch Shaft	1			X	
19	**See Note**	Housing	1				X
20	**50963**	Retainer	1	R			
21	**50899**	Seal	1	R			
22	**See Pg.4**	Spindle	1				X
23	**97679**	Bearing	1		X		
24	**97678**	Shim	1				X
25	**97677**	Shim	1				X
26	**53637**	Gear Set	1			X	
27	**53608**	Wick	1		X		
28	**53600**	Right-Angle Housing Assy.	1				X
A	**96325**	Shell Bearing	1		X		
B	**53649**	Gear Oil Plate	1				X
C	**01041**	Gear Oil Fitting	1				X
29	**53163**	Side Handle	1				X
30	**01266**	Bearing	1		X		
31	**53635**	Pinion Adapter	1				X
32	**51969**	Coupling Nut	2				X
33	**50902**	Coupling Insert	1			X	
34	**53650**	Lock Ring	1				X
35	**53651**	Spacer	1				X
36	**96498**	Wave Spring	1		T, L		
37	**95438**	O-Ring	1				T, X
38	**53620**	Adapter	1				X
39	**54520**	Bearing	1		T, X		
40	**04014**	Set Screw	1		L		
41	**01041**	Grease Fitting	1			X	
42	**53695**	Adapter	1				X
43	**53669**	Carrier	1			X	
44	**53195**	Gear	2			X	
45	**04026**	Needle Bearing	4			X	
46	**53679**	Shaft	1			X	
47	**53665**	Ring Gear	1			X	
48	**51951**	Shim Pack	1		T, L		
49	**51922**	Front Bearing Plate	1			X	
50	**96441**	Pin	2			X	
51	**51927**	Spacer	1		T, X		
52	**53666**	Rotor	1			X	
53	**51926**	Blade (4/pkg.)	1	T, X			
54	**51925**	Cylinder	1			X	
55	**51923**	Rear Bearing Plate	1			X	
56	**02057**	Bearing	1		T, X		
57	**96445**	Pin	2			X	
58	**51924**	Gasket	1		T, X		
59	**51933**	Governor Assembly	1				X
60	**See Pg.4**	Housing	1				X
61	**96444**	Pin	1		T, L		
62	**51949**	Safety Lever Assembly	1			X	
63	**51946**	Valve Stem Assembly	1		T, X		
64	**51945**	Valve Seat	1				X
57	**51944**	Tip Valve	1		T, X		
58	**51943**	Spring	1				X
59	**96442**	O-Ring	1		T, L		
60	**51940**	Spacer	1				X
61	**53682**	Gasket	1				
62	**94528**	Felt Silencer	1	T, R			
63	**53686**	Muffler Cap	1				X
64	**94924**	Wave Spring	1				X
65	**53683**	Spacer	1				X
66	**53681**	Inlet Bushing	1				X

LEGEND	
T	Part included Tune-up Kit
X	Type of wear, no other comments apply.
L	Easily lost. Care during assembly/disassembly.
D	Easily damaged during assembly/disassembly.
R	Replace each time tool is disassembled.



96532 – 1hp Motor Tune-Up Kit

Note: Please refer to page 4 of tool manual for specific part number or number required.

Optional Accessories

FIND THE MOST CURRENT OFFERING OF SUPPORT DOCUMENTS AND ACCESSORIES @ WWW.DYNABRADE.COM



Dynaswivel®

- Swivels 360° AT TWO PIVOT POINTS allowing the air hose to drop directly to the floor while providing superb tool handling.

95461 – 3/8" NPT

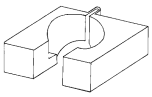

51989 Repair Collar

- Specially designed collar for use in vise to prevent damage to valve body of tool during disassembly/assembly.



Dynabrade Air Lube

- Formulated for pneumatic equipment.
- Absorbs up to 10% of its weight in water.
- Prevents rust and formation of sludge.
- Keeps pneumatic tools operating longer with greater power and less down time.

95842: 1pt. (473 ml)

95843: 1gal. (3.8 L)



Bearing Press Tool

- Used to install bearings.

96243: For installing 02057 Bearing.
96244: For installing 01266 Bearing.



Dynabrade Angle Gear Oil

- Specifically formulated to saturate wick system in right angle gear head.

95848: 2 oz. tube

95541: Push-Type Gear Oil Gun



97782 Retainer Repair Tool

- Tool has a 3/8 in. square socket for use with 3/8 in. drive; breaker bar, ratchet head, or torque wrenches.



96209 Motor Repair Clamp

- Specially designed clamp to secure motor cylinder before disassembly.



90082 Natural Sheepskin Polishing Pad



96532 Motor Tune-Up Kit

- Includes assorted parts to help maintain and repair motor.

01904 Drop-In Motor - 2,800 RPM

- Allows quick and easy replacement. No motor adjustments needed.



53621 Over Hose Assembly

- Over Hose Assembly directs exhaust away from operator.



53698 Carrier Wrench

- Carrier Wrench has a 3/8 in. square socket for use with 3/8 in. drive; breaker bar, ratchet head, or torque wrenches.



95544 Grease 2.5 oz.

- Multi-purpose grease for all types of bearings, cams, gears.
- High film strength; excellent resistance to water, steam, etc.
- Workable range 0˚ F to 300˚ F.

95541 Push-type Grease Gun

- One-hand operation.

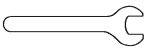

95263 – 17 mm open-end wrench.
95281 – 19 mm open-end wrench.



53209 Ergo-Handle

- Increases operators comfort when using unbalanced wheels.

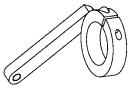

50984 Top Handle Assembly

REFERENCE CONTACT INFORMATION

American National Standards Institute (ANSI) • www.ansi.org
25 West 43 Rd St., 4th Floor • New York, NY 10036 • Tel: 1 (202) 293-8020

Compressed Air & Gas Institute (CAGI) • www.cagi.org
1300 Sumner Ave. • Cleveland, OH 44115
Tel: 1 (216) 241-7333

European Committee for Standards (PNEUROP) • www.pneurop.org
rue de Drapiers 21 • 1050 Brussels, Belgium

International Organization for Standardization (ISO)
www.iso.org • PO Box 56 • Ch-1211 Geneve 20, Switzerland

U.S. Government Publishing Office (GPO) • www.gpo.gov
Superintendent of Documents
732 North Capitol Street NW • Washington, DC 20401
Tel: 1 (202) 512-1800

DYNABRADE, INC. ***www.dynabrade.com***

8989 Sheridan Drive • Clarence, NY 14031-1419 • Phone: (716) 631-0100 • Fax: 716-631-2073 • International Fax: 716-631-2524

©DYNABRADE, INC., 2018

DYNABRADE®