For Serial No. 07L0001 and Higher

Parts Page Reorder No. PD08•02
Effective January, 2008
Supersedes: PD05•17

Electric Right Angle Polisher

Model:
51615 — 800-1,800 RPM

Electric Motor and Machine Parts

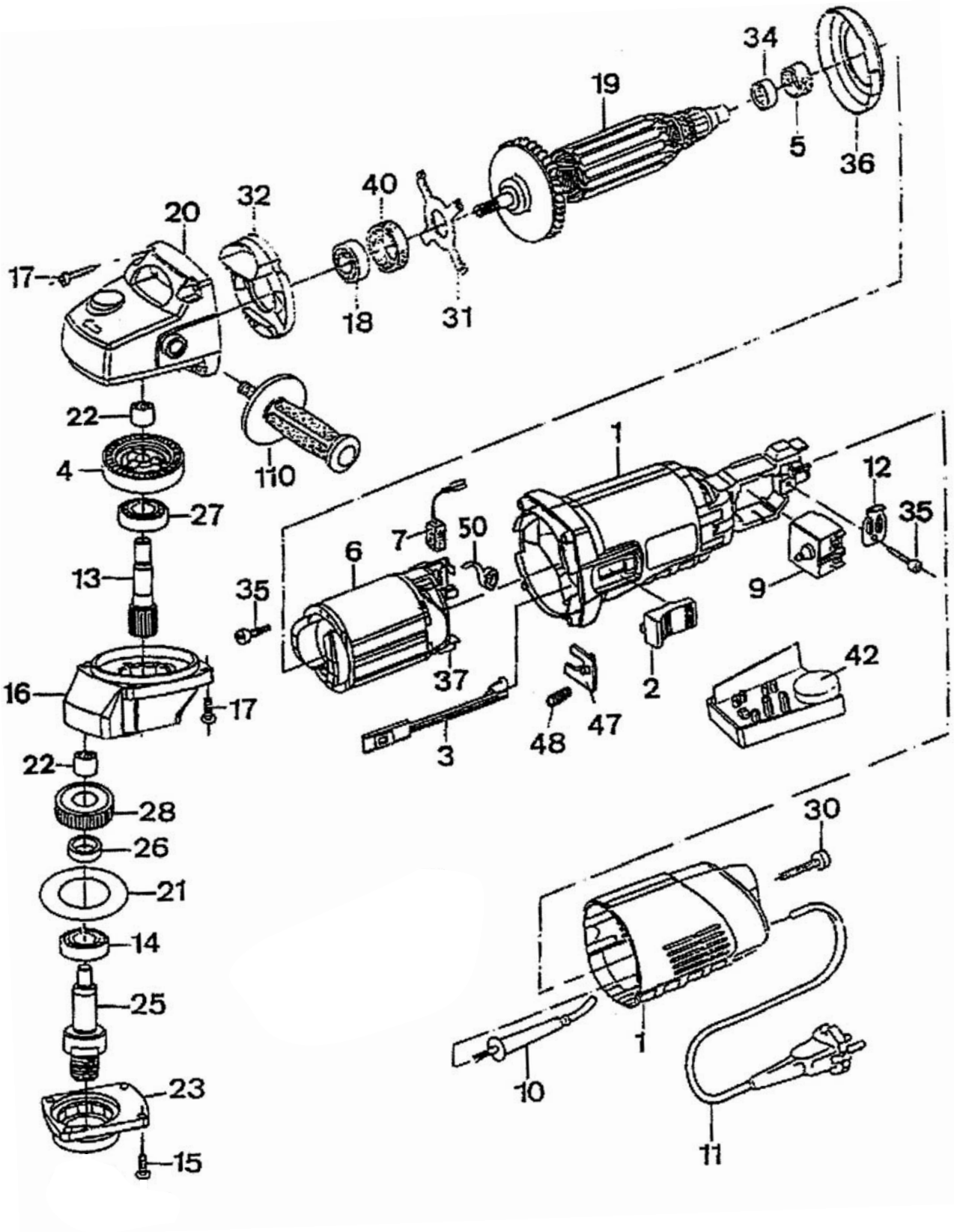

DYNABRADE Electrical Polisher Model No. 51615

SPARE PARTS LIST

ITEM	P/N	DESCRIPTION	DENOMINACION	DENOMINATION
1	42800	Red motor cover	Cubierta motor	Couvercle moteur red
2	42801	Switch control button	Mando interruptor rojo	Bouton interrupter
3	42802	Switch control	Palanca interruptor minus	Leiver interrupter
4	42843	Gear Wheel	Rueda	Roue
5	42803	Rubber ring	Anillo goma rodamiento 607Z	Baque caoutxouc
6	42804	Field 230V	Estator 230V	Stator 230V
7	42805	Brush 4,8mm	Escobilla 4,8x10 faston	Balai 4,8mm
9	42807	Switch	Interruptor	Interrupteur
10	42808	Sleeve	Manguito	Manchon
11	42809	Power cord (EU)	Cable toma corriente (EU)	Cáble prise courant (EU)
11B	42844	Power cord (UK)	Cable toma corriente (UK)	Cáble prise courant (UK)
12	42810	Cable fastening clamp	Brida fijar cable	Bride fixation câble
13	42811	Spindle	Eje dentado	Broche
14	42812	Ball bearing 6001-2RS	Rodamiento 6001-2RS	Roulement 6001-2RS
15	42813	Screw M4x12	Tornillo torx M4x12 ZNG	Vis M4x12
16	42814	Gear cover	Cuerpo reductor	Plateau
17	42815	Screw 4x20 ZNG	Tornillo torx 4x20 ZNG	Vis 4x20 ZNG
18	42816	Ball bearing 609-ZZC3	Rodamiento 609 Alta vel.	Roulement 609-ZZC3
19	42817	Kit Armature+wheel 230V	Grupo Inducido+rueda 230V	Group Induit+roue 230V
20	42818	Gear box	Cabezal minus rod 609 (Pintado)	Carter
21	42819	Washer	Arandela muelle platillo	Rondelle
22	42820	Needle bushing	Casquuillo agujas HK0810	Douille a aguilles
23	42821	Cover plate	Tapa plato	Couvercle plateau
25	42823	Disc spindle	Eje portadisco	Broche portedisque
26	42824	Bushing	Dolla	Douille
27	42825	Ball bearing 6000	Rodamiento 6000 Alta vel.	Roulement 6000
28	42826	Gear	Rueda engranaje	Engrenage
30	42845	Screw M4x16	Tornillo torx TP 4x16 ZNG	Vis M4x16
31	42846	Ball bearing cover	Tapa rodamiento cabezal	Couvercle roulement
32	42830	Air deflector	Deflector aire	Air deflector
34	42847	Ball bearing 607	Rodamiento 607-ZZHSCP	Roulement 607
35	42833	Screw 3,5X14	Tornillo torx TP 3,5X14 ZNG	Vis 3,5X14
36	42848	Air guide	Guia aire	Guide d´air
37	42849	Brush holder	Grupo portaescobillas	Porte-balai
40	42850	Rubber ring	Anillo goma cabezal	Baque caoutxouc
42	42851	Speed control 230V	Regulador 230V	Regulateur 230V
47	42852	Spring support	Soporte mecanismo palanca	Support ressort
48	42853	Spring	Muelle palanca interruptor	Ressort
50	42854	Brush spring	Muelle Escobilla	Ressort balai
110	42842	Aux. handle	Pũno auxiliar	Poingnee auxiliaire

FIELD
ITEM 6

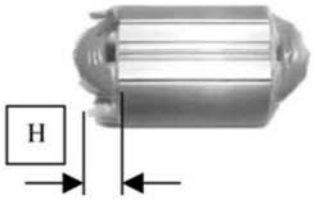

P/N	H
42804	13mm

CARBON
ITEM 7

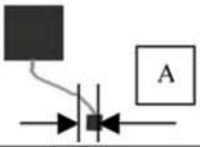

P/N	A
42805	4.8mm

SPINDLE
ITEM 13



P/N	Z
42811	10

GEAR COVER
ITEM 16

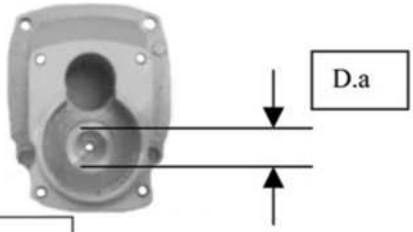

P/N	D.a
42814	12mm

DISC SPINDLE
ITEM 25



P/N	D.a
42823	8mm

GEAR WHEEL
ITEM 28

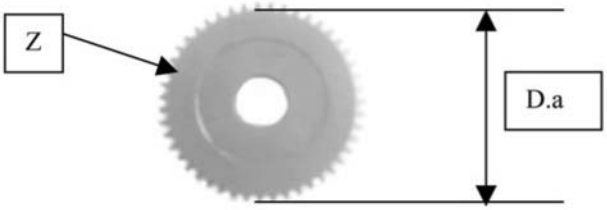

P/N	Z	D.a
42826	21	28,5mm

BRUSH HOLDER
ITEM 34

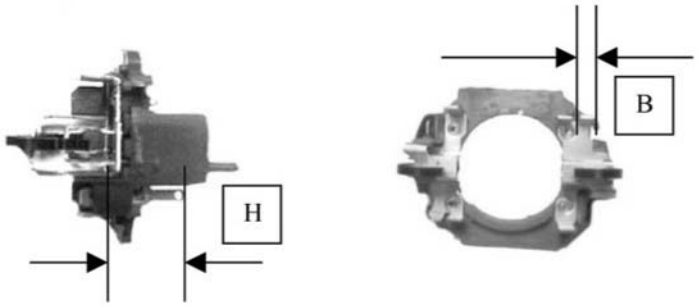

P/N	B	H
42832	4.8mm	18mm

©DYNABRADE, INC., 2008