Reorder No. PD07.05
Supersedes PD06.15

DYNABRADE®

Industrial Downdraft Table
Operating Manual

Models:

64203 84 cm x 152 cm (33 in. x 60 in.)

64204 91 cm x 183 cm (36 in. x 72 in.)



Model: **64204** Shown

Keep workplace area free of contaminants while sanding and finishing wood or non-combustible materials.

Keep machine running when not in use to help clean the shop environment.





SAFETY LEGEND



⚠ WARNING

Read and understand tool manual before work starts to reduce risk of injury to operator, visitors, and tool.

⚠ WARNING

Practice safety requirements. Work alert, have proper attire, and do not operate tools under the influence of alcohol or drugs.





⚠ WARNING

Eye protection must be worn at all times, eye protection to conform to ANSI Z87.1.

⚠ WARNING

Ear protection to be worn when exposure to sound, exceeds the limits of applicable Federal, State or local statues, ordinances and/or regulations.





⚠ WARNING

Respiratory protection to be used when exposed to contaminants that exceed the applicable threshold limit values required by law.

⚠ WARNING

Electric shock hazard. Avoid bodily contact with grounded objects, bodies of water. Do not damage cord set.



IMPORTANT SAFETY INSTRUCTIONS

When operating this equipment, basic precautions should always be strictly followed including the instructions listed below:

DOWNDRAFT TABLE SAFETY INSTRUCTIONS

1. Always use a grounded power supply. There is an increased risk of electric shock with an ungrounded power supply.
2. Don't expose to rain or wet conditions. There is an increased risk of electric shock if the switch, cord or motor are wet.
3. Do not abuse the power cord. Never use the cord to move the table. Never use the cord to pull the plug from an outlet. A damaged cord increases the risk of electric shock.
4. Use caution when opening or closing the top. Switch power off and unplug cord before opening top. Remove all work pieces and tools before opening top to avoid injury. Keep fingers and hands clear when closing the top to avoid injury.
5. Never use to exhaust chemical vapors
6. Vibration may occur if unit is unlevel.
7. Unplug power cord when accessing blower compartment area.
8. Power switch must be off when servicing filter.
9. Do not use this table to sand or grind materials that may create sparks.
10. Do not use for explosive metallic dust (Aluminum, Magnesium, etc.)

IMPORTANT NOTICE

COMPLETE ASSEMBLY DIAGRAM

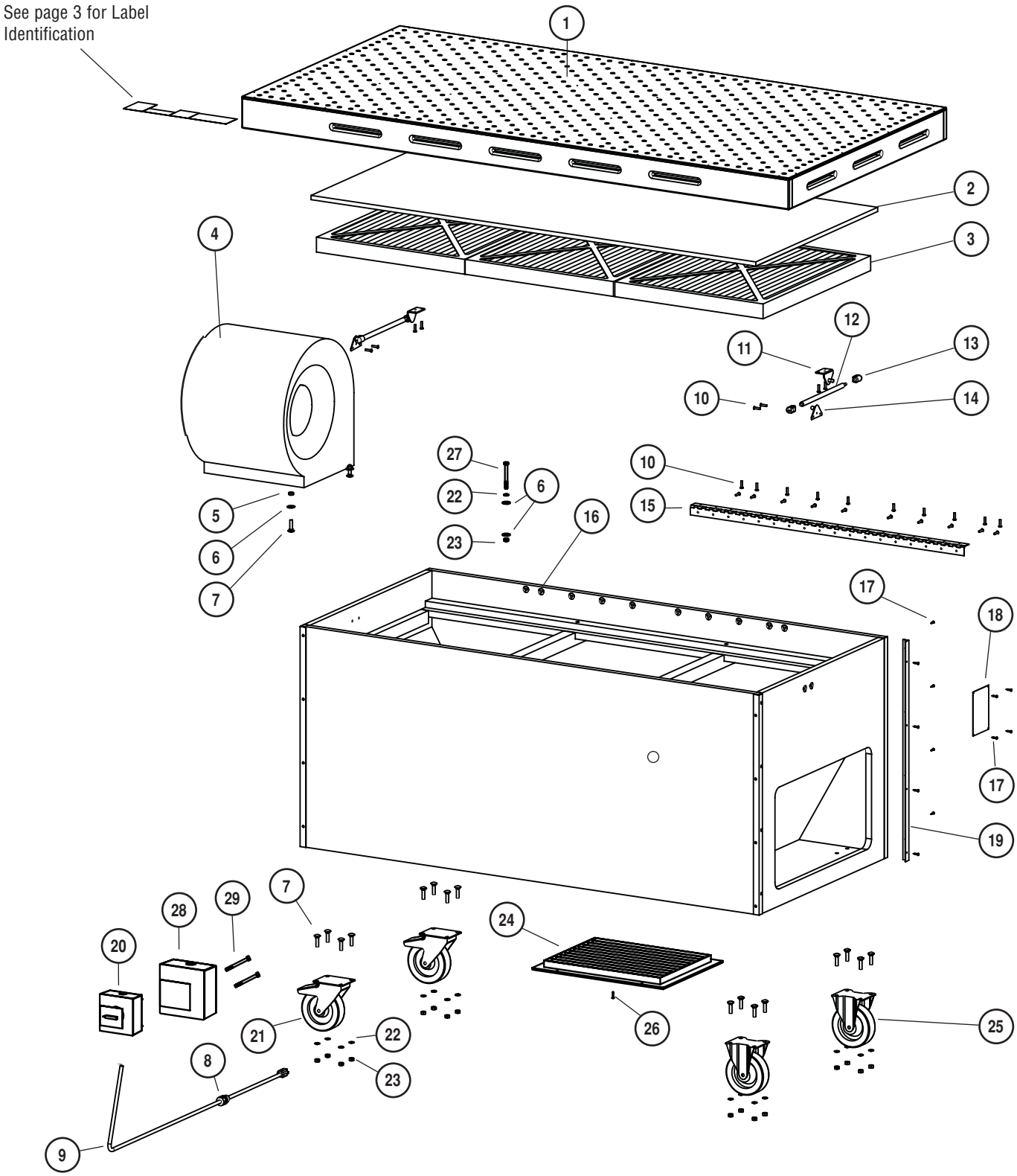

REPLACEMENT PARTS

ITEM NO.	PART NO.	DESCRIPTION	QTY.
1	**64246**	Downdraft Table Top, Model: 64203 (84 cm x 152 cm [33" x 60"])	1
	64251	Downdraft Table Top, Model: 64204 (91 cm x 183 cm [36" x 72"])	1
2	**64985**	Pre-Filter, Model: 64203 (84 cm x 152 cm [33" x 60"])	1
	64986	Pre-Filter, Model: 64204 (91 cm x 183 cm [36" x 72"])	1
3	**64671**	Air Filter (**Note:** Qty. 2 Models: 64203, Qty. 3 Model: 64204)	See Note
4	**64269**	Motor/Blower	1
5	**64239**	Hex Nut (Nylon Insert)	4
6	**95183**	Washer	8
7	**64232**	Bolt	20
8	**98701**	Cord Grip	4
9	**64267**	Cord	1
10	**64230**	Screw	28
11	**64225**	Bracket	2
12	**64222**	Gas Shock/Spring	2
13	**64223**	Ball Socket	4
14	**64224**	Bracket	2
15	**64220**	Hinge	1
16	**64226**	T-Nut	28
17	**64234**	Screw	36
18	**65059**	Name Plate	1
19	**64257**	Corner Guard	4
20	**64268**	Switch (EU)	1
21	**64218**	Locking Caster	2
22	**95042**	Lock Washer	18
23	**97216**	Nut	18
24	**64277**	Louver	1
25	**64219**	Rigid Caster	2
26	**97492**	Screw	4
27	**97493**	Bolt	4
28	**64288**	Plastic Cover	1
29	**97498**	Screw	2

LABEL IDENTIFICATION

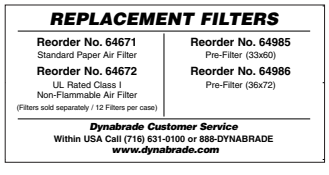

64679
Replacement Filter Label

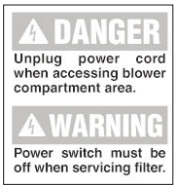

64696
Electric Warning Label



64697
Spark Warning Label



64698
Information Label

SET-UP/OPERATING/MAINTENANCE INSTRUCTIONS

DOWNDRAFT TABLE SET UP INSTRUCTIONS

1. Make sure power cord is unplugged from power supply.
2. Install two rigid casters and two swivel casters into position as shown on complete assembly diagram (pg. 2).
3. Position table in work area and lock swivel casters to stabilize the table.
4. Install provided filters and pre-filter.
5. Make sure top is closed and power switch is off before plugging cord into grounded power supply.

DOWNDRAFT TABLE OPERATING AND MAINTENANCE INSTRUCTIONS

1. Switch power on to begin dust collection.
2. Do not block more than 50% of inlet holes during use.
3. Do not obstruct outlet.
4. Switch power off and unplug cord before opening top.
5. Clean pre-filter and pleated filters daily.
6. Clean top surface only with brush or dry cloth as necessary.
7. Do not use alcohol on top surface.
8. Replace filters every 30-60 days as necessary.
9. Vacuum filter support rails regularly to assure proper seating.

MACHINE SPECIFICATIONS

Model Number	Motor W (hp)	Voltage	Phase	Vacuum Suction	Sound Level	Working Area Width	Working Area Length	Height cm (Inch)	Shipping Wt. kg (lbs.)
64203	550 (.75)	230/50Hz	1	1900 SCFM	72 dB(A)	84 cm (33")	152 cm (60")	91 (36)	129 (285)
64204	550 (.75)	230/50Hz	1	1900 SCFM	72 dB(A)	91 cm (36")	183 cm (72")	91 (36)	166 (365)

OPTIONAL ACCESSORIES

REPLACEMENT FILTERS

64671 Standard Paper Air Filter

64672 UL Rated Class I Non-Flammable Air Filter

REPLACEMENT GRIP TOP

64248 For use with Model: 64203

64253 For use with Model: 64204

REPLACEMENT PRE-FILTERS

64985 84 cm x 152 cm (33 in. x 60 in.)

64986 91 cm x 183 cm (36 in. x 72 in.)

Note: Filters sold separately / 12 filters per case

DYNABRADE, INC.
8989 Sheridan Drive • Clarence, New York 14031-1490 • Phone: (716) 631-0100
Fax: 716-631-2073 • *US Consumers Call Toll Free: 1-800-828-7333*

DYNABRADE INTERNATIONAL
8989 Sheridan Drive • Clarence, New York 14031-1490 • Phone: (716) 631-0100
Fax: 716-631-2524 • *Canadian Consumers Call Toll Free: 1-800-344-1488*

DYNABRADE EUROPE S.à r.l.
Zone Artisanale • L-5485 Wormeldange-Haut, Luxembourg
Phone: +352 768 494 1 • Fax: +352 768 495

DYNABRADE DO BRASIL
Rua Mário Fongaro • 421 – Vila Marlene • São Bernardo do Campo
SP – CEP 09732-530 • Telefax: (11) 4124-6040

www.dynabrade.com

©DYNABRADE, INC., 2007

PRINTED IN USA

PD07.05_02/07

DYNABRADE®