Parts Page Reorder No. PD04•23
Effective May, 2004
Supersedes PD03•03

Electric Disc Sander

Tool Manual – Safety, Operation and Maintenance

SAVE THIS DOCUMENT, EDUCATE ALL PERSONNEL

Models:

40587 – 4" Disc Sander
(For use with Locking-Type Pads.)
Use Hard Density Pads Only!



⚠ WARNING

Read and understand this tool manual before operating your tool. Follow all safety rules for the protection of operating personnel as well as adjacent areas. For safety information, refer to – CFR 29 Part 1910, European Committee for Standards (EN) Hand Held Electric Motor Operated Tools – Safety Requirements and applicable State and Local Regulations.

SAFETY LEGEND

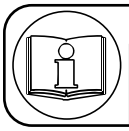

⚠ WARNING

Read and understand tool manual before work starts to reduce risk of injury to operator, visitors, and tool.

⚠ WARNING

Practice safety requirements. Work alert, have proper attire, and do not operate tools under the influence of alcohol or drugs.





⚠ WARNING

Eye protection must be worn at all times, eye protection to conform to ANSI Z87.1.

⚠ WARNING

Ear protection to be worn when exposure to sound, exceeds the limits of applicable Federal, State or local statues, ordinances and/or regulations.





⚠ WARNING

Respiratory protection to be used when exposed to contaminants that exceed the applicable threshold limit values required by law.

⚠ WARNING

Electric shock hazard. Avoid bodily contact with grounded objects, bodies of water. Do not damage cord set.

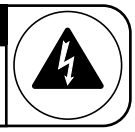

GENERAL SAFETY RULES

WARNING! Read and understand all instructions. Failure to follow all instructions listed below, may result in electric shock, fire and /or serious personal injury.

SAVE THESE INSTRUCTIONS

Work Area

1. **Keep your work area clean and well lit.** Cluttered benches and dark areas invite accidents.
2. **Do not operate power tools in explosive atmospheres, such as in the presence of flammable liquids, gases, or dust.** Power tools create sparks which ignite the dust or fumes.
3. **Keep bystanders, children, and visitors away while operating a power tool.** Distractions can cause you to lose control.

Electrical Safety

1. **Double Insulated tools are equipped with a polarized plug (one blade is wider than the other.) This plug will fit in polarized outlet only one way. If the plug does not fit fully in the outlet, reverse the plug. If it still does not fit, contact a qualified electrician to install a polarized outlet. Do not change the plug in any way.** Double Insulation ⧈ eliminates the need for the three wire grounded power cord and grounded power system.
2. **Avoid body contact with grounded surfaces such as pipes, radiators, ranges and refrigerators.** There is an increased risk of electric shock if your body is grounded.
3. **Don't expose power tools to rain or wet conditions.** Water entering a power tool will increase the risk of electric shock.
4. **Do not abuse the cord. Never use the cord to carry the tools or pull the plug from an outlet. Keep cord away from heat, oil, sharp edges or moving parts. Replace damaged cords immediately.** Damaged cords increase the risk of electric shock.

(continued on next page)

5. **When operating a power tool outside, use an outdoor extension cord marked "W-A" or "W."** These cords are rated for outdoor use and reduce the risk of electric shock.

Personal Safety

1. **Stay alert, watch what you are doing and use common sense when operating a power tool. Do not use tool while tired or under the influence of drugs, alcohol, or medication.** A moment of inattention while operating power tools may result in serious personal injury.
2. **Dress properly. Do not wear loose clothing or jewelry. Contain long hair. Keep your hair, clothing, and gloves away from moving parts.** Loose clothes , jewelry, or long hair can be caught in moving parts.
3. **Avoid accidental starting. Be sure switch is off before plugging in.** Carrying tools with your finger on the switch or plugging in tools that have the switch on invites accidents.
4. **Remove adjusting keys or switches before turning the tool on.** A wrench or a key that is left attached to a rotating part of the tool may result in personal injury.
5. **Do not overreach. Keep proper footing and balance at all times.** Proper footing and balance enables better control of the tool in unexpected situations.
6. **Use safety equipment. Always wear eye protection.** Dust mask, non-skid safety shoes, hard hat, or hearing protection must be used for appropriate conditions.

Tool Use and Care

1. **Use clamps or other practical way to secure and support the workpiece to a stable platform.** Holding the work by hand or against your body is unstable and may lead to loss of control.
2. **Do not force tool. Use the correct tool for your application.** The correct tool will do the job better and at the rate for which it is designed.
3. **Do not use tool if switch does not turn it on or off.** Any tool that cannot be controlled with the switch is dangerous and must be repaired.
4. **Disconnect the plug from the power source before making any adjustments, changing accessories, or storing the tool.** Such preventative safety measures reduce the risk of starting the tool accidentally.
5. **Store idle tools out of reach of children and other untrained persons.** Tools are dangerous in the hands of untrained users.
6. **Maintain tools with care. keep cutting tools sharp and clean.** Properly maintained tools, with sharp cutting edges are less likely to bind and are easier to control.
7. **Check for misalignment or binding of moving parts, breakage of parts, and any other condition that may affect the tools operation. If damaged, have the tool serviced before using.** Many accidents are caused by poorly maintained tools.
8. **Use only accessories that are recommended by the manufacturer for your model.** Accessories that may be suitable for one tool, may become hazardous when used on another tool.

Service

1. **Tool service must be performed only by qualified repair personnel.** Service or maintenance performed by unqualified personnel could result in a risk of injury.
2. **When servicing a tool, use only identical replacement parts. Follow instructions in the Maintenance section of this manual.** Use of unauthorized parts or failure to follow Maintenance Instructions may create a risk of electric shock or injury.

SPECIFIC SAFETY RULES

1. **Accessories must be rated for at least the speed recommended on the tool warning label.** Wheels and other accessories running over rated speed can fly apart and cause injury.
2. **Hold tool by insulated gripping surfaces when performing an operation where the cutting tool may contact hidden wiring or its own cord.** Contact with "live" wire will make exposed metal parts of the tool " live" and shock the operator.

TOOL DESCRIPTION

Electric Disc Sander – Is a right angle electric hand tool with a 3/8"-24 spindle which includes: an on/off switch, side handle, a **50192** Disc Pad, and is equipped with a 8 ft. cord set.

ASSEMBLY and OPERATION INSTRUCTIONS

1. With power source disconnected from tool, securely fasten abrasive/accessory on tool. The rated RPM of the accessory must be equal to or greater than the rated RPM of the tool.
2. Connect power source to tool. Be careful not to depress switch in the process.
3. Hold tool by the motor housing and the side handle. Do Not hold tool by head/housing assembly. Keep hands away from all grinding/sanding edges and moving parts.
4. Push, slide switch forward to start tool. Depress rear of slide switch to disengage tool.

MAINTENANCE and ACCESSORY CARE INSTRUCTIONS

Important: A preventative maintenance program is recommended whenever portable power tools are used.

- Use only genuine Dynabrade replacement parts to insure quality. To order replacement parts, specify **Model #**, **Serial #** and **RPM** of your tool.

Routine Preventative Maintenance: Check free speed of Electric Dynabrade Tool using a tachometer.

- Mineral spirits are recommended when cleaning the sanding heads. Do not use on electrical components or clean tool or parts with any solvents or oils containing acids, esters, ketones, chlorinated hydrocarbons or nitro carbons. Blow the dirt from electrical components with air.
- DO NOT clean or maintain tools with chemicals that have a low flash point (example: WD-40®).
- Tool labels must be kept legible at all times, if not, reorder label(s) and replace. User is responsible for maintaining specification information i.e.: Model #, S/N, and RPM. (See Assembly Breakdown)
- Visually inspect plugs and cords for frays, visible damage and signs of deterioration. Replace damaged or worn components.
- Refer to Dynabrade's Warning/Safety Operating Instructions Tag (Reorder No. **95903**) for safety information.
- Brush Changing – When the brushes wear down to a predetermined length, the tool is automatically shut off to prevent damage to the armature. Unplug tool and remove brush caps (item #23) and replace brushes (item #22). Replace brush caps.

After maintenance is performed on tool check for excessive tool vibration. Check for excessive current leakage at 550 volts with a current leakage checker on all screws and the gear case, if the electrical components have been disturbed during repair.

Handling and Storage of Tool and Accessories:

- Use of tool rests, hangers and/or balancers is recommended.
- DO NOT carry tool by cord.
- Protect abrasive accessories from exposure to water, solvents, high humidity, freezing temperature and extreme temperature changes.
- Store accessories in protective racks or compartments to prevent damage.

Angle-Head and Assemblies

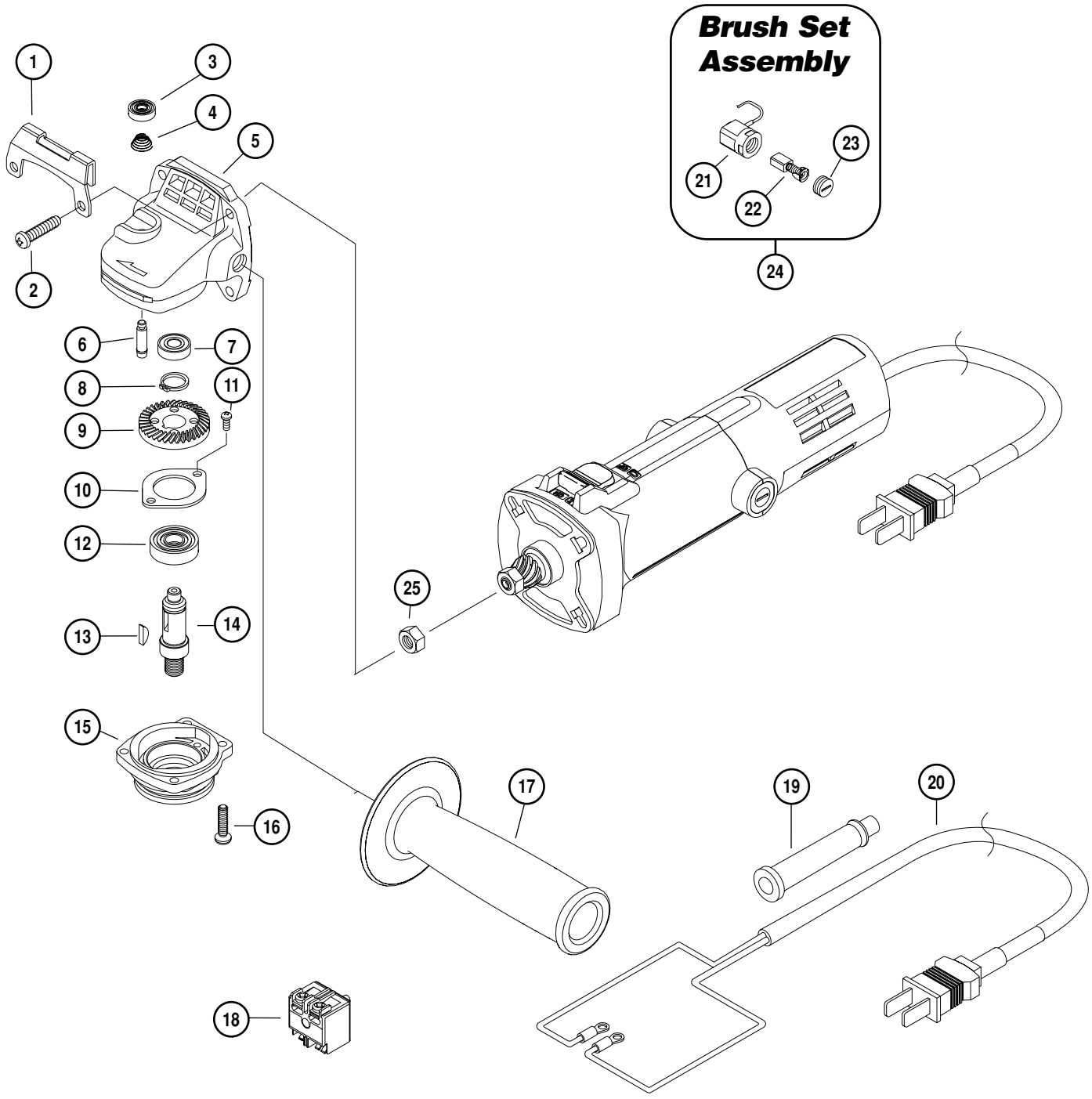

To order replacement parts, specify model number and serial number of your machine.

Index Key

No.	Part #	Description
1	**42741**	Guard Plate
2	**42722**	Screw (4)
3	**42725**	Lock Button
4	**42724**	Lock Spring
5	**42723**	Gear Case Assembly (Includes: #3, #4 & #6)
6	**42721**	Lock Pin
7	**42720**	Upper Spindle Bearing
8	**42719**	Retaining Ring
9	**42718**	Gear/Pinion Set
10	**42716**	Bearing Retainer
11	**42715**	Screw (2)
12	**42714**	Lower Spindle Bearing
13	**42713**	Key
14	**42738**	Spindle 3/8"-24
15	**42750**	Gear Case Cover
16	**42710**	Screw (4)
17	**42726**	Side Handle
18	**42729**	Switch
19	**42730**	Cord Protector
20	**42731**	Power Supply Cord
21	**42732**	Brush Holder (2)
22	**42733**	Brush (2)
23	**42734**	Brush Cap (2)
24	**42735**	Brush Set
25	**42746**	Nut

Disc Sander and Motor/Angle-Head Assembly

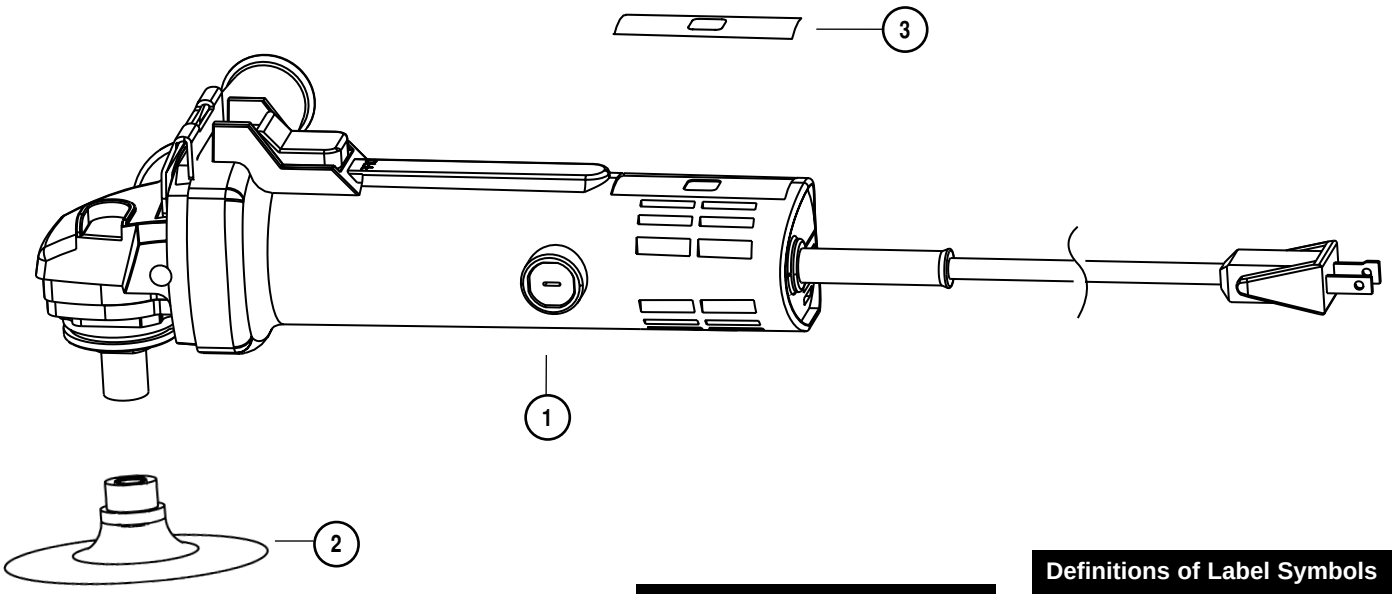

Index Key

No.	Part #	Description
1	**40580**	Motor/Angle-Head Assembly
2	**50192**	4" Disc Pad
3	**40316**	Label

Definitions of Label Symbols

Symbol	Description
A	amperes
Hz	hertz
⧈	Class II Construction
n_0	no load speed
.../min	revolutions per min.

Machine Specifications

Model Number	Motor RPM	Motor HP	Pad Diameter Inch (mm)	Voltage	Current	Phase	Frequency	Weight Pound (kg)	Length Inch (mm)	Height Inch (mm)
40587	12,000	1	4 (102)	120 V (AC)	4.6 Amps	1	60 Hz	4 (1.8)	11 (279)	3-7/8 (98)

One Year Warranty

Following the reasonable assumption that any inherent defect which might prevail in a product will become apparent to the user within one year from the date of purchase, all equipment of our manufacture is warranted against defects in workmanship and materials under normal use and service. We shall repair or replace at our factory, any equipment or part thereof which shall, within one year after delivery to the original purchaser, indicate upon our examination to have been defective. Our obligation is contingent upon proper use of Dynabrade tools in accordance with factory recommendations, instructions and safety practices. It shall not apply to equipment which has been subject to misuse, negligence, accident or tampering in any way so as to affect its normal performance. Normally wearable parts such as bearings, brushes, gears, etc., are not covered under this warranty.

Reference Contact Information

1. **American National Safety Institute – ANSI**
   24 West 43rd Street
   Fourth Floor
   New York, NY 10036
   Tel: 1 (212) 642-4900
   Fax: 1 (212) 398-0023

2. **Government Printing Office – GPO**
   Superintendent of Documents
   Attn. New Orders
   P.O. Box 371954
   Pittsburgh, PA 15250-7954
   Tel: 1 (202) 512-1803

3. **European Committee for Standardization**
   Rue de Stassart 36
   B - 1050 Brussels, Belgium

Visit Our Web Site: www.dynabrade.com **Email:** Customer.Service@Dynabrade.com

DYNABRADE®

DYNABRADE, INC., 8989 Sheridan Drive • Clarence, NY 14031-1490 • Phone: (716) 631-0100 • Fax: 716-631-2073 • International Fax: 716-631-2524
DYNABRADE EUROPE S.à.r.l., Zone Artisanale • L-5485 Wormeldange—Haut, Luxembourg • Telephone: 352 76 84 94 1 • Fax: 352 76 84 95 1

© DYNABRADE, INC., 2004
PRINTED IN USA PD04.23_05/04