PD02-62R
Effective February, 2018
Supersedes
PD02•62

1 hp Right-Angle 115 - 127 mm Grinders Governor Controlled

Air Tool Manual – Safety, Operation and Maintenance

SAVE THIS DOCUMENT, EDUCATE ALL PERSONNEL



Models:

50308 – 12,000 RPM, (115 - 127 mm)
Depressed Center Wheel Grinder
(22 mm Arbor Hole, M14 x 2 Spindle)

⚠ WARNING

Read and understand this tool manual before operating your air tool. Follow all safety rules for the protection of operating personnel as well as adjacent areas. Always operate, inspect and maintain this tool in accordance with the American National Safety Institute (ANSI) Safety Code for Portable Air Tools – B186.1. For additional safety information, refer to Safety Requirements for the Use, Care and Protection of Abrasive Wheels – ANSI B7.1, Code of Federal Regulation – CFR 29 Part 1910, European Committee for Standards Hand Held Non-Electric Power Tools – Safety Requirements and applicable State and Local Regulations.

SAFETY LEGEND



⚠ WARNING

Carefully read and understand the General and Wheel Grinder sections found in Tool Safety & Operating Guidelines (PN00001676) before handling or using tool.

⚠ WARNING

Practice safety requirements. Work alert, have proper attire, and do not operate tools under the influence of alcohol or drugs.





⚠ WARNING

Eye protection must be worn at all times, eye protection to conform to ANSI Z87.1.

⚠ WARNING

Ear protection to be worn when exposure to sound, exceeds the limits of applicable Federal, State or local statues, ordinances and/or regulations.





Respiratory protection to be used when exposed to contaminants that exceed the applicable threshold limit values required by law.

⚠ WARNING

Air line hazard, pressurized supply lines and flexible hoses can cause serious injury. Do not use damaged, frayed or deteriorated air hoses and fittings.



SAFETY INSTRUCTIONS

Carefully Read all instructions before operating or servicing any Dynabrade® Abrasive Power Tool.
Products offered by Dynabrade are not to be modified, converted or otherwise altered from the original design without expressed written consent from Dynabrade, Inc.

Tool Intent: Right-Angle Grinders are ideal for removal of material using properly speed-rated (RPM) Reinforced Type 27 grinding wheels.

Do Not Use Tool For Anything Other Than Its Intended Applications.

Training: Proper care, maintenance, and storage of your air tools will maximize their performance.

- Employer's Responsibility – Provide right-angle grinder operators with safety instructions and training for safe use of tools and accessories.

Accessory Selection:

- Use only Reinforced Type 27 grinding wheels with the proper arbor diameter.
- Abrasive/accessory RPM (speed) rating MUST be approved for AT LEAST the tool RPM rating.
- Before mounting an accessory, visually inspect for defects. Do not use defective accessories.
- Use only recommended accessories. Reference Dynabrade catalog and this tool manual.
- Follow tool specifications before choosing size and type of accessory.
- Only use recommended fittings and air line sizes. Air supply hoses and air hose accessories must have a minimum working pressure of 150 PSIG (10 Bars, g) or 150 percent of the maximum pressure produced in the system, whichever is higher. (See tool Machine Specifications table.)

OPERATING INSTRUCTIONS

Warning: Always wear eye protection. Operator of tool is responsible for following: accepted eye, face, respiratory, hearing and body protection. Always use wheel guard. Make sure it is positioned to best protect the operator and make sure it is securely fastened. Wheel guards that are worn, damaged or have been subject to a wheel breaking must be replaced.

(continued on next page)

OPERATING INSTRUCTIONS (continued)

Caution: Hand, wrist and arm injury may result from repetitive work, motion and overexposure to vibration.

- Keep hand and clothing away from working end of the air tool.

Operation: Be sure that any loose clothing, hair and all jewelry is properly restrained.

- Secure inlet bushing on air tool with a wrench before attempting to install the air fitting to avoid damaging housing assembly.
- BEFORE MOUNTING A WHEEL, after all tool repairs and whenever a grinder is issued for use, check tool RPM (speed) with tachometer with air pressure set at 90 PSIG while the tool is running. If tool is operating at a higher speed than the RPM marked on the tool housing, or operating improperly, the tool must be serviced and corrected before use.

Caution: Tool RPM must never exceed abrasive/accessory RPM rating. Check accessory manufacturer for details on maximum operating speed or special mounting instructions.

TYPE 27 Wheel Mounting

- With power source disconnected from the air tool.
- Clean spindle and flange mounting surfaces. Inspect for nicks, cuts and sharp edges.
- Install drive flange with raised boss facing outward.
- Check for flange flatness and runout by rotating spindle and drive flange together.
- Install reinforced type 27 depressed center wheel over spindle thread and over raised boss on flange.
- Install outer flange nut with raised boss facing toward abrasive wheel and secure flange firmly against the wheel.
- Check for wheel firmness by holding the spindle and pulling on the edge of the wheel in the tightening direction.

Caution: Over tightening the outer flange nut can cause damage to the wheel and/or flanges. For thin wheel designs, install outer flange nut with raised boss facing outward and secure flange firmly against the wheel.

- Use only Dynabrade flanges: Model **50308**: **53630** & **53631** Flanges for wheels with 22 mm arbor holes.

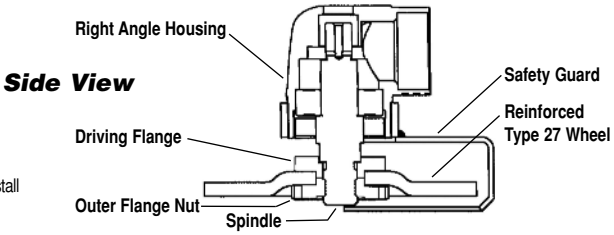

- Connect air tool to power source. Be careful NOT to depress throttle lever in the process. **Do not expose air tool to inlet pressure above 90 PSIG or (6.2 Bars).**

Caution: After installing the accessory, make sure that no one is in the unguarded plane of the wheel before starting the grinder. IN A PROTECTED AREA, test run the wheel at a reduced speed to check for good balance. Gradually increase tool speed. DO NOT USE if tool vibration is excessive. Correct cause, and retest to insure safe operation. Test wheel at its free speed (RPM) in a protected area for at least one minute before applying the wheel to the work.

- Make sure that work area is uncluttered, and visitors are at a safe range from the tools and debris.
- Air tools are not intended for use in explosive atmospheres and are not insulated for contact with electric power sources.
- Use a vise or clamping device to hold work piece firmly in place.
- Do not apply excessive force on tool or apply "rough" treatment to it.
- Always work with a firm footing, posture and proper lighting.
- Ensure that sparks and debris resulting from work does not create a hazard.
- This tool has rear exhaust. Exhaust may contain lubricants, vane material, bearing grease, and other materials flushed thru the tool.

Warning: Grinding certain materials can create explosive dust. It is the employers responsibility to notify the user of acceptable dust levels.

- Grinding can cause sparks which can cause fires or explosions. It is the users responsibility to make sure the work area is free of flammable materials.

Report to your supervisor any condition of the tool, accessories, or operation you consider unsafe.

Air System

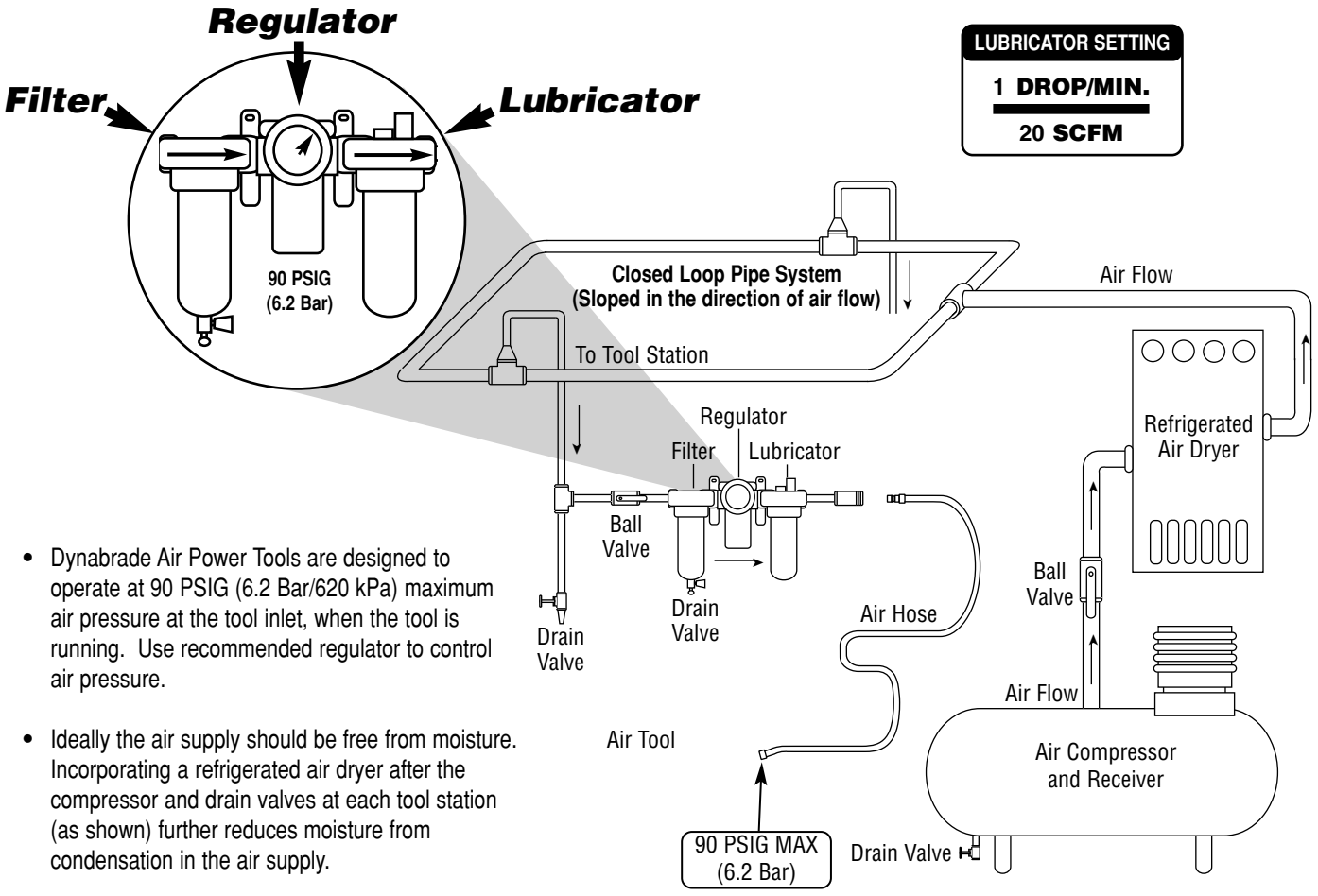

- Dynabrade Air Power Tools are designed to operate at 90 PSIG (6.2 Bar/620 kPa) maximum air pressure at the tool inlet, when the tool is running. Use recommended regulator to control air pressure.
- Ideally the air supply should be free from moisture. Incorporating a refrigerated air dryer after the compressor and drain valves at each tool station (as shown) further reduces moisture from condensation in the air supply.

Disassembly Instructions - 1 hp Right-Angle Grinder

Important: Manufacturer's warranty is void if tool is disassembled before warranty expires.
Disconnect tool from power source before tool repair.

Right Angle Head Disassembly:

1. Remove side handle, flange and abrasive wheel.
2. Remove guard assembly.
3. Secure **53600** Right Angle Housing, against both side handle bosses, in a padded vise with spindle facing upward.
4. Using **97782** Pin Wrench (ordered separately) or an adjustable pin wrench, remove **50963** Retainer. (**Left Hand Threads**)
5. Remove **53609** Shaft Seal from spindle or retainer.
6. Pull spindle and gear assembly from housing.
7. Press spindle through **97679** Bearing and spiral bevel gear.
8. Remove shims and **53608** Wick from right angle housing.
9. Remove **53650** Lock Ring from right angle housing (**Left Hand Threads**) and from motor housing (**Right Hand Threads**).
10. Remove angle head from vise and remove **96325** Bearing by pressing **53649** Gear Oil Plate through housing.
11. Pull pinion gear, bearing and coupler sub-assembly from angle housing.
12. Secure pinion gear wrench flats and remove the **51935** flexible coupler (twist counterclockwise).
13. Secure **53635** Adapter using **95049** 3/16" Hex Key Wrench and remove pinion gear (twist counterclockwise).
14. Press **53635** Adapter through **01266** Bearing.

Right Angle Head Disassembly Complete.

Motor Disassembly:

1. Remove **53651** Spacer and **96498** Wave Spring from housing assembly.
2. Pull motor assembly from housing, and remove **53620** Motor Adapter with **95438** O-Ring.
3. Remove governor assembly by using a slotted screwdriver. (**Left Hand Threads**)
4. Using **96209** Repair Clamp (ordered separately) secure **51925** Cylinder and place a 1/8" (3 mm) drift pin to the base of the terminal thread and press the **51921** Rotor from the **02057** Rear Bearing.
5. Slide **02057** Rear Bearing from **51923** Rear Bearing Plate.
6. Remove **51925** Cylinder and **51926** Blades.
7. Secure **51921** Rotor in padded vise and remove **51935** Extension Coupler (twist counterclockwise).
8. Slide **51922** Front Bearing Plate and **51927** Rotor Spacer from **51921** Rotor.
9. Slide **54520** Bearing and shims from **51922** Front Bearing Plate.

Motor Disassembly Complete.

Housing Disassembly:

1. Secure housing using **51989** Repair Collar (see back cover for Optional Accessories).
2. Remove inlet bushing with muffler assembly (twist counterclockwise).
3. Remove **53682** Gasket, **51943** Spring, **96442** O-Ring, **51940** Spacer, **94528** Felt Silencer, **53686** Muffler Cap, **94924** Wave Spring and **53683** Spacer from **53681** Inlet Bushing.
4. Remove **51944** Tip Valve and **51945** Valve Seat.
5. Remove housing and **51989** Repair Collar and lay collar on bench with flange facing down so it is supporting throttle lever. Place a 3/32" (2.4 mm) drift pin on **96444** Pin and tap pin thru housing.
6. Remove **51946** Valve Stem Assembly.
7. Remove **96443** O-Ring from **51946** Valve Stem Assembly.

Housing Disassembly Complete.

Assembly Instructions - 1 hp Right-Angle Grinder

Motor Assembly:

Important: Be sure parts are clean and in good repair before assembling. Follow gear oil, oil and torque specifications.

1. Place **51921** Rotor into a padded vise with male thread facing upwards.
2. Slip **51927** Rotor Spacer over rotor shaft and down against rotor body face.
3. Press **96441** Coiled Pin into **51922** Front Bearing Plate. Make certain, coiled pin does not protrude beyond internal bearing surface.
4. Place a .002" shim into the base of **51922** Front Bearing Plate as an initial spacing and slide **54520** Bearing to the front plate base.
   Note: 51951 Shim Pack contains 001" and .002" shims.
5. Slip bearing/bearing plate assembly onto rotor. Add one drop of Loctite® #243 (or equiv.) to **51921** Rotor 3/8"-24 male thread and screw **51935** Coupler into place (Torque to 17 N•m 150 lb.-in.).
6. Check clearance between rotor and front bearing plate by using a .001" feeler gauge. Clearance should be between .001" – .0015". Adjust clearance by repeating steps 4 and 5 with different shims if necessary.
7. Once proper rotor gap clearance is achieved, install well lubricated **51926** Blades (4) into rotor slots. Dynabrade recommends lubricating blades with **95842** Air Lube.
8. Install **51925** Cylinder over rotor and front plate raised boss. Align coiled pin on front plate to cylinder slot.
9. Press **96441** Coiled Pin into blind hole on **51923** Rear Bearing Plate. Press (2) **96445** Coiled Pins into the back side of rear bearing plate.
10. Peel backing off **51924** Gasket and apply it firmly in place onto **51923** Rear Bearing Plate.
11. Place **51923** Rear Bearing Plate over rotor mandrel and insert raised boss on rear bearing plate into cylinder diameter, while inserting short coiled pin into cylinder slot. Be sure inlet slot on rear bearing plate line up with inlet slot on cylinder. To correct alignment flip cylinder end to end and repeat steps 8 & 9 for correct assembly.
12. Using **96243** Bearing Press Tool (ordered separately) press **02057** Bearing onto rotor and into **51923** Rear Bearing Plate hole until it is seated.
    Important: Cylinder must fit snug between bearing plates. If too tight, rotor will not turn freely. Rotor must be lightly tapped at press fit end until rotor spins freely while still maintaining a snug fit. A loose fit will not achieve the proper preload on motor. While pressing **02057** Bearing, make certain to contact inner race of bearing

(continued on next page)

1 hp Right-Angle Grinder
Complete Assembly Breakdown

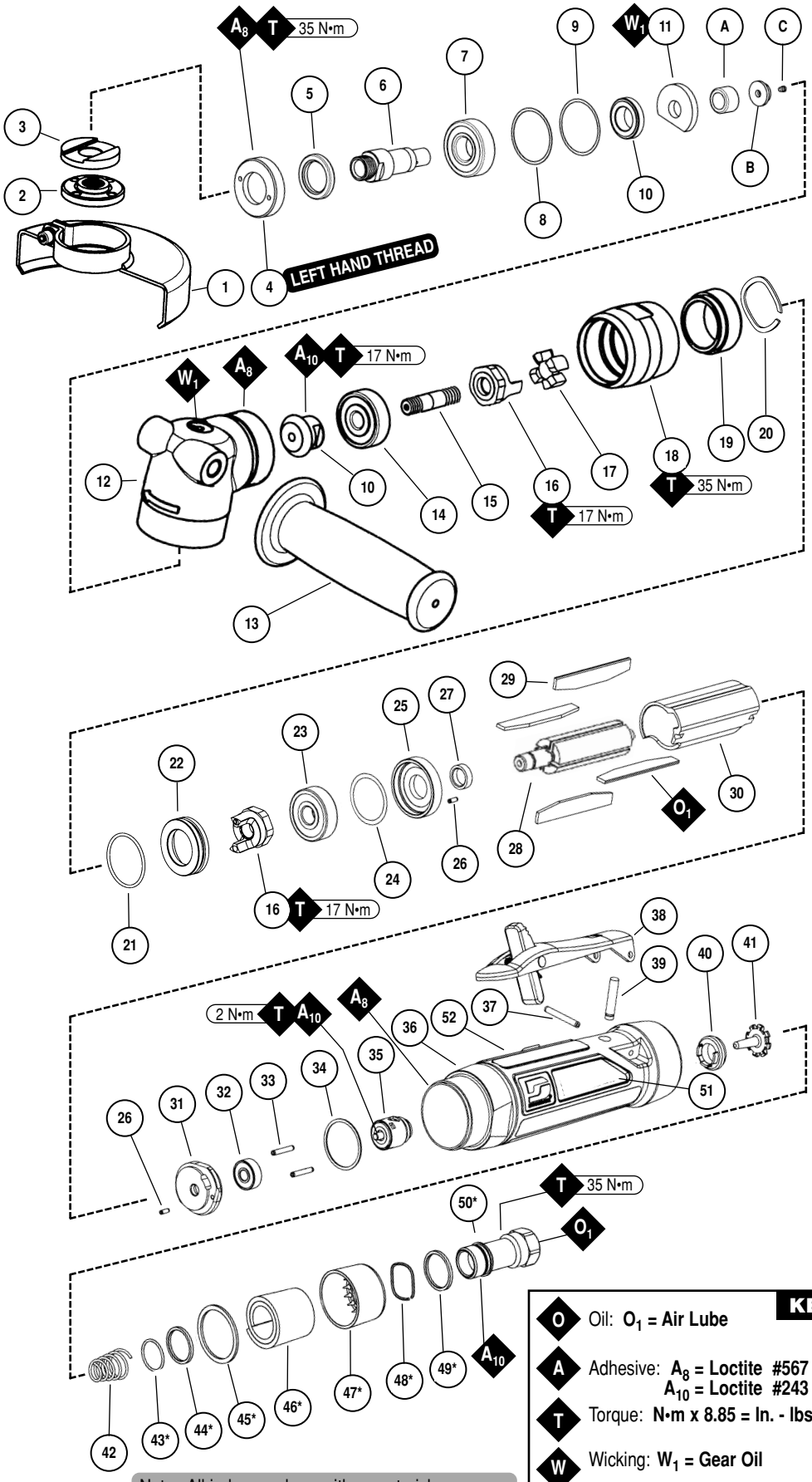

Index Key

No.	Part #	Description
1	**53691**	Guard
2	**53631**	Locking Flange
3	**53630**	Back-Up Flange
4	**50963**	Retainer
5	**53609**	Shaft Seal
6	**53629**	Spindle M14 x 2
7	**97679**	Bearing
8	**97678**	Shim
9	**97677**	Shim
10	**53637**	Gear Set
11	**53608**	Wick
12	**53600**	Right-Angle Housing Assy. Includes the following:
A	**96325**	Shell Bearing
B	**53649**	Gear Oil Plate
C	**01041**	Gear Oil Fitting
13	**53163**	Side Handle
14	**01266**	Bearing
15	**53635**	Pinion Adapter
16	**51935**	Coupling (2)
17	**51936**	Coupling Insert
18	**53650**	Lock Ring
19	**53651**	Spacer
20	**96498**	Wave Spring
21	**95438**	O-Ring
22	**53620**	Adapter
23	**54520**	Bearing
24	**51951**	Shim Pack
25	**51922**	Front Bearing Plate
26	**96441**	Pin (2)
27	**51927**	Spacer
28	**51921**	Rotor
29	**51926**	Blade (4/Pkg.)
30	**51925**	Cylinder
31	**51923**	Rear Bearing Plate
32	**02057**	Bearing
33	**96445**	Pin (2)
34	**51924**	Gasket
35	**51932**	Governor Assembly
36	**Housing Includes:** Warning & Specification Labels **50323**	Housing
37	**96444**	Pin
38	**51949**	Safety Lever Assembly
39	**51946**	Valve Stem Assembly (Incl. **96443** O-Ring)
40	**51945**	Valve Seat
41	**51944**	Tip Valve
42	**51943**	Spring
43	**96442**	O-Ring
44	**51940**	Spacer
45	**53682** **53687**	Gasket - Standard Gasket - For use with overhose (Ordered Separately)
46	**94528**	Felt Silencer
47	**53686**	Muffler Cap
48	**94924**	Wave Spring
49	**53683**	Spacer
50	**53681**	Inlet Bushing (Incl. 2 – **51938** Screens)

Label Key

No.	Part #	Description
51	**00001248**	Warning Label
52	**00001181**	Specification Label

Note: All index numbers with an asterisk are included in P/N **53655** Muffler Assembly.

KEY

- O — Oil: **O_1 = Air Lube**
- A — Adhesive: **A_8 = Loctite #567**, **A_{10} = Loctite #243**
- T — Torque: **N•m x 8.85 = In. - lbs.**
- W — Wicking: **W_1 = Gear Oil**

Always follow adhesive manufacturers cleaning and priming recommendations.

Assembly Instructions - (Continued)

Important: Manufacturer's warranty is void if tool is disassembled before warranty expires.
Please refer to parts breakdown for part identification.

13. Add one drop of Loctite® #243 (or equiv.) to governor assembly male thread and screw governor assembly into place (**Left Hand Threads**) with a slotted screwdriver. Torque to 2 N•m (18 lb. - in.)
14. Install motor assembly into housing, making sure motor drops all the way into housing. **Note:** Align both **96445** Coiled Pins to slots in insert and against **51924** Gasket.
15. Install **95438** O-Ring onto **53620** Adapter and slide adapter into housing and over **54520** Bearing.
16. Place **96498** Wave Washer onto **53620** Adapter.
17. Place **51936** Coupling Insert into **51935** Coupling. Make certain radii aligns with radii in coupling base, to correct alignment remove insert and rotate 90˚.

Motor Assembly Complete.

Right Angle Head Assembly:

1. Press **01041** Gear Oil Fitting into **53649** Gear Oil Plate and insert sub-assembly into right angle housing.
2. Press **96325** Bearing into housing until it is firmly seated against **53649** Gear Oil Plate. **Important:** While pressing **96325** Bearing, make certain press tool is similar in size to the outside diameter of the bearing.
3. Add one drop of Loctite® #243 (or equiv.) to male thread of **53635** Adapter and tighten pinion using a **95049** 3/16" Hex Key Wrench and the pinion wrench flats. Torque to 17 N•m (150 lb.- in.)
4. Using **96244** Bearing Press Tool (ordered separately) press **53635** Adapter into **01266** Bearing. **Important:** While pressing **01266** Bearing, make certain to contact inner race of bearing only.
5. Add one drop of Loctite® #243 (or equiv.) to male thread of adapter and tighten **51935** Coupler using wrench flats. Torque to 17 N•m (150 lb.- in.)
6. Insert sub-assembly into male threaded end of **53600** Right Angle Housing.
7. Apply a small amount of Loctite® #567 (or equiv.) to **53600** Right Angle Housing thread, and install **53650** Lock Ring (**Left hand Threads**).
8. Insert **53651** Spacer, with long length first, into **53650** Lock Ring and up against **01266** Bearing.
9. Apply a small amount of loctite® #567 (or equiv.) to male thread of motor housing.
10. Align **51936** Coupling Insert into **51935** Coupling in R/A head assembly. Make certain insert radii aligns with radii in coupling base, to correct alignment remove insert and rotate 90˚.
11. Thread motor housing into **53650** Lock Ring (twist clockwise).
12. Secure **53600** Right Angle Housing, against both side handle bosses, in a padded vise.
13. Rotate motor housing and **53650** Lock Ring until throttle lever is located between the 9-11 o'clock position. Throttle lever in this position safe guards against accidental start ups of the tool. Torque lock ring to 35 N•m (310 lb.- in.)
14. Place well lubricated **53608** Wick against **96325** Bearing with flat edge towards pinion gear. (Wick must be completely saturated with Dynabrade **95848** Gear Oil before installation). **Note:** Do not contaminate wick with any other oil or grease product.
15. Press **97679** Bearing onto spindle and against shoulder. **Important:** While pressing **97679** Bearing, make certain to contact inner race of bearing only.
16. Press gear, with teeth facing away from bearing, onto spindle and against **97679** Bearing inner race.
17. Insert spindle assembly into **53600** Right Angle Housing until **97679** Bearing contacts housing shoulder.
18. Rotate Spindle while pressing down into housing to check for gear alignment and backlash. Install shims as required (minimum backlash is recommended for maximum gear life. Make certain there is clearance throughout 360˚ revolution).
19. Slide **53609** Felt Seal into **50963** Retainer.
20. Apply a small amount of Loctite® #567 (or equiv.) to the male thread of the retainer and thread into place (**Left Hand Threads**).
21. Using **97782** Pin Wrench (ordered separately) or an adjustable pin wrench, torque retainer to 35 N•m (310 lb.- in.).
22. Secure safety guard assembly firmly in place after orienting guard position to best protect the operator.
23. Install drive flange with raised boss facing outward.
24. Install reinforced type 27 depressed center wheel over spindle thread and over raised boss on flange.
25. Install outer flange with raised boss facing toward abrasive wheel and secure flange in place.

Caution: Tighten flange only enough to prevent reinforced type 27 wheel from spinning under working conditions. Over tightening the flange can cause damage to the wheel and/or flanges. If the flange will not tighten enough to prevent reinforced type 27 wheel from spinning remove outer flange and reinstall flange with raised boss facing away from the wheel and retighten.

Housing Assembly:

1. Secure housing using **51989** Repair Collar (see back cover for Optional Accessories) with inlet facing upward.
2. Slide **96443** O-Ring onto **51946** Valve Stem and slide sub-assembly until o-ring passes through housing hole. Make certain valve stem assembly slides freely after the o-ring passes through the hole.
3. Install **51945** Valve Seat by aligning 3 male prongs with three deep slots on insert. Make certain valve seat is pressed flat against base of pocket. **Note:** Add a few drops of Dynabrade Air Lube (P/N **95842**) to pocket walls before inserting **51945** Valve Seat.
4. Install **51944** Tip Valve as shown.
5. Pre-assemble muffler, slide **53683** Spacer over **53681** Inlet Bushing and up against the hex head base. Slide **94924** Wave Spring over **53681** Inlet Bushing and up against spacer. Pre roll **94528** Felt and install it in **53686** Muffler Cap. Support felt in felt/muffler cap assembly and slide **53681** Inlet Bushing thru the inside until the muffler cap assembly seats against the **94924** Wave Spring. Flare the felt and place **51940** Spacer over male thread and set **96442** O-Ring into groove at the base of thread. Return felt to unflared form. Slide **51943** Spring into bushing and up to the two **51938** screens.
6. Place **53682** Gasket over felt silencer and against **53686** Muffler Cap.
7. Apply one drop of Loctite® #243 (or equiv.) to **53681** Inlet Bushing Thread.
8. Align small inside diameter of **51943** Spring to cone point on **51944** Tip Valve and thread inlet bushing and sub-assembly into place. Torque bushing to 35 N•m (310 lb.- in.).
9. Remove housing from **51989** Repair Collar and place repair collar onto the bench top with the part number identifier against the bench. Align the throttle lever holes to housing pinhole and rest the housing and throttle lever onto the legs of the repair collar. Press **96444** Coiled Pin into lever hole and center into housing.

Tool Assembly Complete. Please allow 30 minutes for adhesives to cure before operating tool.
Important: Before operating, place 2-3 drops of Dynabrade Air Lube (P/N **95842**) directly into inlet with throttle lever depressed. Operate tool for 30 seconds to allow air lube to properly lubricate internal motor components. Motor should now be tested for proper operation at 90 PSIG max. If tool operates at a higher RPM than marked on the tool or if vibration and sound levels seem abnormal, the tool should be serviced to correct the cause before use.

Maintenance Instructions

Important: A Preventative Maintenance Program is recommended whenever portable power tools are used. The program should include inspection of air supply lines, air line pressure, proper lubrication and repair of tools. Refer to ANSI B186.1 for additional maintenance information.

- Use only genuine Dynabrade replacement parts to insure quality. To order replacement parts, specify **Model#**, **Serial#** and **RPM** of your air tool.
- All Dynabrade Rotary Vane air tools must be used with a Filter-Regulator-Lubricator to maintain all warranties. Dynabrade recommends the following: **11411** Air Filter-Regulator-Lubricator (FRL) – Provides accurate air pressure regulation and two stage filtration of water contaminants. Operates 55 SCFM/1,558 LPM @ 100 PSIG with 1/2" NPT female ports.
- Lubricate wick system through the angle gear oil fitting with 2-3 plunges for every 8 hours of use, to achieve maximum gear life. **Important:** Use only the recommended angle gear oil for the wick system. Do not contaminate the wick with any other oil or grease product (order **95848** Gear Oil and **95541** Gun).
- Dynabrade recommends one drop of air lube per minute for each 20 SCFM (example: if the tool specification states 40 SCFM, set the drip rate on the filter-lubricator to 2 drops per minute). Dynabrade Air Lube (P/N **95842**: 1 pt 473 ml) is recommended.

Routine Preventative Maintenance:

- Check free speed of right-angle grinder using a tachometer. This governor controlled right-angle grinder should be speed checked every 20 hours of use or weekly, whichever occurs more frequently.
- DO NOT disassemble the governor for any reason. Reorder correct speed – governor assembly (See Assembly Breakdown) and recheck free speed of tool with a tachometer.
- Inspect flanges regularly for nicks, cuts, sharp edges, flatness and runout. Replace damaged or worn flanges with genuine Dynabrade flanges.
- Inspect wheel guard for wear or damage. Guards that are bent and severely worn or subject to a wheel breakage must be replaced.
- Inspect grinding wheels before mounting. Do not mount wheels that are damaged or cracked.
- Check grinding wheel - speed rating. Rating on wheel must be greater than the tool speed marked on the housing.
- If grinding wheel breakage occurs, investigate to determine the cause and correct before issuing tool for work.

- Mineral spirits are recommended when cleaning the tool and parts. Do not clean tool or parts with any solvents or oils containing acids, esters, ketones, chlorinated hydrocarbons or nitro carbons.
- DO NOT clean or maintain tools with chemicals that have a low flash point (example: WD-40®).
- A Motor Tune-Up Kit (P/N **96532**) is available which includes high wear and medium wear motor parts.
- Air tool labels must be kept legible at all times, if not, reorder label(s) and replace. User is responsible for maintaining specification information i.e.: Model #, S/N, and RPM. (See Assembly Breakdown)
- Blow air supply hose out prior to initial use.
- Visually inspect air hoses and fittings for frays, visible damage and signs of deterioration. Replace damaged or worn components.
- Refer to Dynabrade's Warning/Safety Operating Instructions Tag (Reorder No. **95903**) for safety information.

After maintenance is performed on tool, add a few drops of Dynabrade Air Lube (P/N **95842**) to the air line and start the tool a few times to lubricate air motor. Check for tool vibration before mounting abrasive wheel accessory.

Handling and Storage:

- Use of tool rests, hangers and/or balancers is recommended.
- Protect tool inlet from debris (see Notice below).
- DO NOT carry tool by air hose or near the tool throttle lever.
- Protect reinforced type 27 depressed center wheel from exposure to water, solvents, high humidity, freezing temperature and extreme temperature changes.
- DO NOT USE type 27 grinding wheels that have been dropped or show signs of cracks, nicks or other defects.
- Store accessories in protective racks or compartments to prevent damage.

Machine Specifications

Model Number	Motor HP (W)	Tool RPM	Air Inlet Thread	Air Flow Rate CFM/SCFM (LPM)	Air Pressure PSIG (Bars)	Spindle Thread	Weight Pound (kg)	Length Inch (mm)	Height Inch (mm)
50308	1 (744)	12,000	3/8" NPT	6 /40 (1,138)	90 (6.2)	M14 x 2	4.8 (2.2)	11-3/4 (299)	3-13/16 (98)

Additional Specifications: Hose I.D. Size 3/8" or 10 mm • Air Flow Rate Based At Max HP • Visit dynabrade.com for your model's vibration and sound data.

Notice

All Dynabrade motors use the highest quality parts and metals available and are machined to exacting tolerances. The failure of quality pneumatic motors can most often be traced to an unclean air supply or the lack of lubrication. Air pressure easily forces dirt or water contained in the air supply into motor bearings causing early failure. It often scores the cylinder walls and the rotor blades resulting in limited efficiency and power. Our warranty obligation is contingent upon proper use of our tools and cannot apply to equipment which has been subjected to misuse such as unclean air, wet air or a lack of lubrication during the use of this tool.

Lifetime Warranty

All Dynabrade portable pneumatic power tools are rigorously inspected and performance tested in our factory before shipping to our customers. If a Dynabrade tool develops a performance problem and an inherent defect is found during normal use and service, Dynabrade will warrant this tool against defects in workmanship and materials for the lifetime of the tool. Upon examination and review at our factory, Dynabrade shall confirm that the tool qualifies for warranty status, and will repair or replace the tool at no charge to the customer. Normally wearable parts and products are NOT covered under this warranty. Uncovered items include bearings, contact wheels, rotor blades, regulators, valve stems, levers, shrouds, guards, O-rings, seals, gaskets and other wearable parts. Dynabrade's warranty policy is contingent upon proper use of our tools in accordance with factory recommendations, instructions and safety practices. It shall not apply to equipment that has been subjected to misuse, negligence, accident or tampering in any way so as to affect its normal performance. To activate lifetime warranty, customer must register each tool at www.dynabrade.com. Dynabrade will not honor lifetime warranty on unregistered tools. A one-year warranty will be honored on all unregistered portable pneumatic power tools. Lifetime warranty applies only to portable pneumatic tools manufactured by Dynabrade, Inc. in the USA. Lifetime warranty applies only to the original tool owner; warranty is non-transferable.

Preventative Maintenance Schedule

For All 1hp Right-Angle Grinders

This service chart is published as a guide to expectant life of component parts. The replacement levels are based on average tool usage over one year. Dynabrade Inc. considers one year usage to be 1,000 hours or 50% of a man year. Parts included in motor tune-up kit are identified by High Wear and Medium Wear items.

LEGEND	
T	Part included in **96532** Tune-up Kit
X	Type of wear, no other comments apply.
L	Easily lost. Care during assembly/disassembly.
D	Easily damaged during assembly/disassembly.
R1	Replace each time tool is disassembled.
R2	Replace each second time tool is disassembled.



96532 – 1 hp. Motor Tune-Up Kit

- Tune-Up Kit includes high wear and medium wear motor parts.

Parts Common to all Models:

Index #	Part Number	Description	Number Required	High Wear 100%	Medium Wear 70%	Low Wear 30%	Non-Wear 10%
1	**53691**	Guard	1				**X**
2	**53631**	Flange - Front	2				**X**
3	**53630**	Flange - Rear	1				**X**
4	**50963**	Retainer	1				**X**
5	**53609**	Shaft Seal	1	**R2**			
6	**53629**	Spindle	1				**X**
7	**97679**	Bearing	1		**X**		
8	**97678**	Shim	1				**X**
9	**97677**	Shim	1				**X**
10	**53637**	Gear Set	1			**X**	
11	**53608**	Wick	1		**X**		
12	**53600**	Right-Angle Housing Assy.	1				**X**
A	**96325**	Shell Bearing	1		**X**		
B	**53649**	Gear Oil Plate	1				**X**
C	**01041**	Gear Oil Fitting	1				**X**
13	**53163**	Side Handle	1				**X**
14	**01266**	Bearing	1		**X**		
15	**53635**	Pinion Adapter	1				**X**
16	**51935**	Coupling	2				**X**
17	**51936**	Coupling Insert	1			**X**	
18	**53650**	Lock Ring	1				**X**
19	**53651**	Spacer	1				**X**
20	**96498**	Wave Spring	1		**T, L**		
21	**95438**	O-Ring	1		**T, X**		
22	**53620**	Adapter	1				**X**
23	**54520**	Bearing	1		**T, X**		
24	**51951**	Shim Pack	1		**T, L**		
25	**51922**	Front Bearing Plate	1			**X**	
26	**96441**	Pin	2			**X**	
27	**51927**	Spacer	1		**T, X**		
28	**51921**	Rotor	1			**X**	
29	**51926**	Blade (4/pkg.)	1	**T, X**			
30	**51925**	Cylinder	1			**X**	
31	**51923**	Rear Bearing Plate	1			**X**	
32	**02057**	Bearing	1		**T, X**		
33	**96445**	Pin	2			**X**	
34	**51924**	Gasket	1		**T, X**		
35	**51932**	Governor Assembly	1				**X**
36	**50323**	Housing	1				**X**
37	**96444**	Pin	1		**T, L**		
38	**51949**	Safety Lever Assembly	1			**X**	
39	**51946**	Valve Stem Assembly	1		**T, X**		
		(Includes **96443** O-Ring)			**T, X**		
40	**51945**	Valve Seat	1				**X**
41	**51944**	Tip Valve	1		**T, X**		
42	**51943**	Spring	1				**X**
43	**96442**	O-Ring	1		**T, L**		
44	**51940**	Spacer	1				**X**
45	**53682**	Gasket	1				**X**
46	**94528**	Felt Silencer	1	**T, R1**			
47	**53686**	Muffler Cap	1				**X**
48	**94924**	Wave Spring	1				**X**
49	**53683**	Spacer	1				**X**
50	**53681**	Inlet Bushing (Incl. 2 – **51938** Screens)	1				**X**

Note: Please refer to page 4 of tool manual for specific part number.

Optional Accessories



Dynaswivel®

- Swivels 360° AT TWO PIVOT POINTS allowing the air hose to drop directly to the floor while providing superb tool handling.

95461 – 3/8" NPT.

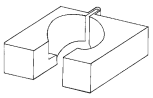

51989 Repair Collar

- Specially designed collar for use in vise to prevent damage to valve body of tool during disassembly/assembly.



Dynabrade Air Lube

- Formulated for pneumatic equipment.
- Absorbs up to 10% of its weight in water.
- Prevents rust and formation of sludge.
- Keeps pneumatic tools operating longer with greater power and less down time.

95842: 1pt. (473 ml)
95843: 1gal. (3.8 L)



96005 Male Plug

- Provides up to twice the air flow compared to standard plug design.
- Plug has "ported" design to prevent "starving" of the air tool.



Dynabrade Angle Gear Oil

- Specifically formulated to saturate wick system in right angle gear head.

95848: 2 oz. tube

95541: Gear Oil Gun

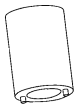

97782 Retainer Repair Tool

- Tool has a 3/8 in. square socket for use with 3/8 in. drive; breaker bar, ratchet head, or torque wrenches.

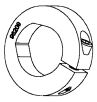

96209 Motor Repair Clamp

- Specially designed clamp to secure motor cylinder before disassembly.



96532 Motor Tune-Up Kit

- Includes assorted parts to help maintain and repair motor.

01902 Drop-In Motor

- Allows quick and easy replacement. No motor adjustments needed.



53621 Overhose Assembly

- Overhose Assembly directs exhaust away from operator.



Composite-Style Coupler

- Lightweight 1.4 oz. (.05 Kg), non-marring composite material.
- Easy connect/disconnect by single push-button action.
- Shock-proof, low-vibration, crush-resistant.

94960: 1/4" Female NPT
94980: 1/4" Male NPT

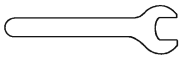

95281 – 19 mm open-end wrench.
94925 – 32 mm pin wrench.



30335 Air Supply Hose

- 3/8 in. I.D. x 60 in. Wide air supply hose, includes: 3/8 in. NPT male and female threaded fittings.



Bearing Press Tool

- Used to install bearings.

96243: For installing 02057 Bearing.
96244: For installing 01266 Bearing.



53209 Ergo-Handle

- Increases operators comfort when using unbalanced wheels.

REFERENCE CONTACT INFORMATION

American National Standards Institute (ANSI) • www.ansi.org
25 West 43 Rd St., 4th Floor • New York, NY 10036 • Tel: 1 (202) 293-8020

Compressed Air & Gas Institute (CAGI) • www.cagi.org
1300 Sumner Ave. • Cleveland, OH 44115
Tel: 1 (216) 241-7333

European Committee for Standards (PNEUROP) • www.pneurop.org
rue de Drapiers 21 • 1050 Brussels, Belgium

International Organization for Standardization (ISO)
www.iso.org • PO Box 56 • Ch-1211 Geneve 20, Switzerland

U.S. Government Publishing Office (GPO) • www.gpo.gov
Superintendent of Documents
732 North Capitol Street NW • Washington, DC 20401
Tel: 1 (202) 512-1800

DYNABRADE, INC. ***www.dynabrade.com***

8989 Sheridan Drive • Clarence, NY 14031-1419 • Phone: (716) 631-0100 • Fax: 716-631-2073 • International Fax: 716-631-2524
©DYNABRADE, INC., 2018

DYNABRADE®