1hp Extension Die Grinder
Governor Controlled

Parts Page Reorder No. PD01•70R
Effective October, 2002
Supercedes PD01•70

Air Tool Manual – Safety, Operation and Maintenance

SAVE THIS DOCUMENT, EDUCATE ALL PERSONNEL

Models:

52675 – 9,000 RPM, with 1/4" Collet
52676 – 12,000 RPM, with 1/4" Collet
52677 – 15,000 RPM, with 1/4" Collet
52678 – 18,000 RPM, with 1/4" Collet
52679 – 20,000 RPM, with 1/4" Collet
52695 – 9,000 RPM, with 6 mm Collet
52696 – 12,000 RPM, with 6 mm Collet
52697 – 15,000 RPM, with 6 mm Collet
52698 – 18,000 RPM, with 6 mm Collet
52699 – 20,000 RPM, with 6 mm Collet



⚠ WARNING

Read and understand this tool manual before operating your air tool. Follow all safety rules for the protection of operating personnel as well as adjacent areas. Always operate, inspect and maintain this tool in accordance with the American National Safety Institute (ANSI) Safety Code for Portable Air Tools – B186.1. For additional safety information, refer to Safety Requirements for the Use, Care and Protection of Abrasive Wheels – ANSI B7.1, Code of Federal Regulation – CFR 29 Part 1910, European Committee for Standards (EN) Hand Held Non-Electric Power Tools – Safety Requirements and applicable State and Local Regulations.

SAFETY LEGEND

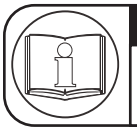

⚠ WARNING

Read and understand tool manual before work starts to reduce risk of injury to operator, visitors, and tool.

⚠ WARNING

Practice safety requirements. Work alert, have proper attire, and do not operate tools under the influence of alcohol or drugs.





⚠ WARNING

Eye protection must be worn at all times, eye protection to conform to ANSI Z87.1.

⚠ WARNING

Ear protection to be worn when exposure to sound, exceeds the limits of applicable Federal, State or local statues, ordinances and/or regulations.





⚠ WARNING

Respiratory protection to be used when exposed to contaminants that exceed the applicable threshold limit values required by law.

⚠ WARNING

Air line hazard, pressurized supply lines and flexible hoses can cause serious injury. Do not use damaged, frayed or deteriorated air hoses and fittings.



SAFETY INSTRUCTIONS

Carefully Read all instructions before operating or servicing any Dynabrade® Abrasive Power Tool.
Products offered by Dynabrade are not to be modified, converted or otherwise altered from the original design without expressed written consent from Dynabrade, Inc.

Tool Intent: Extension Die Grinders are ideal for removal and polishing of materials using deburring, cleaning and polishing accessories.

Do Not Use Tool For Anything Other Than Its Intended Applications.

Training: Proper care, maintenance, and storage of your tool will maximize its performance.

- Employer's Responsibility – Provide Extension Die Grinder operators with safety instructions and training for safe use of tools and accessories.

Accessory Selection:

- Abrasive/accessory RPM (speed) rating MUST be approved for AT LEAST the tool RPM rating.
- Before mounting an accessory, visually inspect for defects. Do not use defective accessories.
- Mount only recommended accessories. See back page of manual and Dynabrade catalog.
- Follow tool specifications before choosing size and type of accessory
- Only use recommended fittings and air line sizes. Air supply hoses and air hose assemblies must have a minimum working pressure rating of 150 PSIG (10 bars, g) or 150 percent of the maximum pressure produced in the system, whichever is higher. (See tool Machine Specifications table.)
- DO NOT use – Cut-off wheels, router bits or other products outside tool intent.

OPERATING INSTRUCTIONS

Warning: Always wear eye protection. Operator of tool is responsible for following: accepted eye, face, respiratory, hearing and body protection.

Caution: Hand, wrist and arm injury may result from repetitive work, motion and overexposure to vibration.

- Keep hand and clothing away from working end of the air tool.
- Be sure that any loose clothing, hair and all jewelry is properly restrained.
- Secure inlet bushing on air tool with a wrench before attempting to install the air fitting to avoid damaging housing assembly.
- Check tool RPM (speed) with tachometer with air pressure set at 90 PSIG while the tool is running. If tool is operating at a higher speed than the RPM marked on the tool housing, or operating improperly, the tool must be serviced and corrected before use.

Caution: Tool RPM must never exceed abrasive/accessory RPM rating. Check accessory manufacturer for details on maximum operating speed or special mounting instructions.

- With power source disconnected from air tool, mount recommended accessory into collet assembly.
- The mandrel diameter of the abrasive/accessory must insert freely, but not loosely, all the way to the base of the collet body before tightening the collet cap. Use wrenches provided.

Caution: The mandrel shall be inserted to the full depth of the gripping jaws of the collet. At least one-half the mandrel length shall be inserted into the collet to prevent excessive overhang. Refer to accessory manufacturer's instructions for proper overhang. (Ref. ANSI B186.1)

Warning: Sliding the accessory's mandrel out from the collet insert creates an "OVER HANG" condition. This practice is NOT recommended, reducing the free speed of the tool by reducing the air pressure must be done to avoid cutting tool breakage and serious injury.

MANDREL MOUNTING

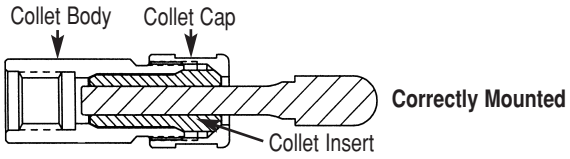

- Connect air tool to power source. Be careful NOT to depress throttle lever in the process.
  Do not expose air tool to inlet pressure above 90 PSIG or (6.2 Bars).

Caution: After installing the accessory, the Extension Die Grinder must be started at a reduced speed to check for good balance. Gradually increase tool speed. DO NOT USE if tool vibration is excessive. Correct cause, and retest to insure safe operation.

- Make sure that work area is uncluttered, and visitors are at a safe range from the tools and debris.
- Use a vise or clamping device to hold work piece firmly in place.
- Do not apply excessive force on tool or apply "rough" treatment to it.
- Always work with a firm footing, posture and proper lighting.

Report to your supervisor any condition of the tool, accessories, or operation you consider unsafe.

Air System

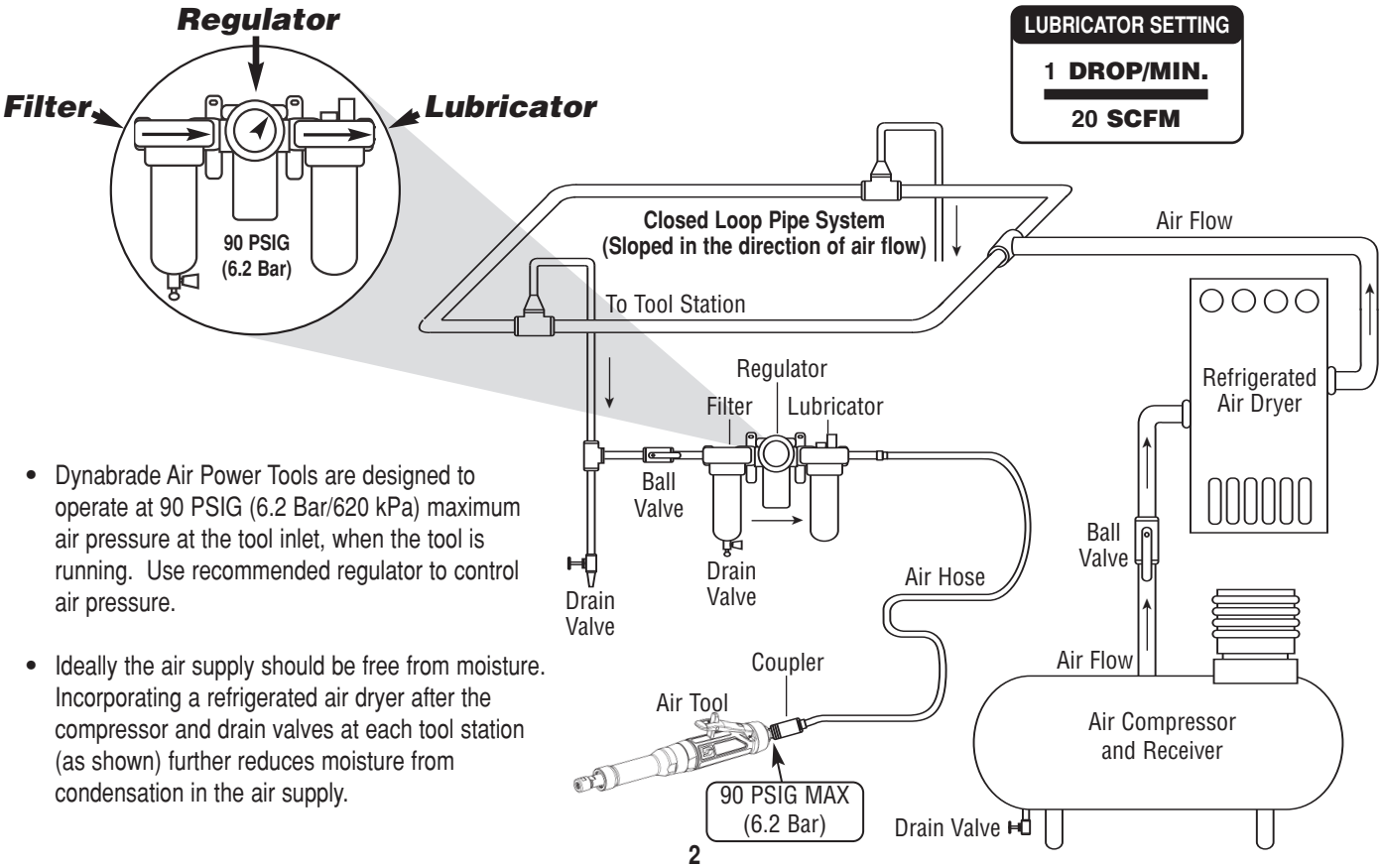

- Dynabrade Air Power Tools are designed to operate at 90 PSIG (6.2 Bar/620 kPa) maximum air pressure at the tool inlet, when the tool is running. Use recommended regulator to control air pressure.

- Ideally the air supply should be free from moisture. Incorporating a refrigerated air dryer after the compressor and drain valves at each tool station (as shown) further reduces moisture from condensation in the air supply.

Maintenance Instructions

Important: A Preventative Maintenance Program is recommended whenever portable power tools are used.

- Use only genuine Dynabrade replacement parts to insure quality. To order replacement parts, specify **Model#**, **Serial#** and **RPM** of your air tool.
- All Dynabrade Rotary Vane air tools must be used with a Filter-Regulator-Lubricator to maintain all warranties. Dynabrade recommends the following: **11411** Air Filter-Regulator-Lubricator (FRL) – Provides accurate air pressure regulation and two stage filtration of water contaminants. Operates 55 SCFM/1,558 LPM @ 100 PSIG with 1/2" NPT female ports.
- Dynabrade recommends one drop of air lube per minute for each 20 SCFM (example: if the tool specification states 40 SCFM, set the drip rate on the filter-lubricator to 2 drop per minute). Dynabrade Air Lube (P/N **95842**: 1 pt 473 ml) is recommended.

Routine Preventative Maintenance: Check free speed of Extension Die Grinder using a tachometer. This governor controlled grinder should be speed checked every 20 hours of use or weekly, whichever occurs more frequently.

- DO NOT disassemble the governor for any reason. Reorder correct speed – governor assembly (See Assembly Breakdown) and recheck free speed of tool with a tachometer.
- Periodically remove collet insert and clean the inside diameter and slots from debris to keep accessories secure and reduce vibration.
- Mineral spirits are recommended when cleaning the tool and parts. Do not clean tool or parts with any solvents or oils containing acids, esters, ketones, chlorinated hydrocarbons or nitro carbons.
- DO NOT clean or maintain tools with chemicals that have a low flash point (example: WD-40®).
- A Motor Tune-Up Kit (P/N **96532**) is available which includes high wear and medium wear motor parts.
- Air tool labels must be kept legible at all times, if not, reorder label(s) and replace. User is responsible for maintaining specification information i.e.: Model #, S/N, and RPM. (See Assembly Breakdown)
- Blow air supply hose out prior to initial use.
- Visually inspect air hoses and fittings for frays, visible damage and signs of deterioration. Replace damaged or worn components.
- Refer to Dynabrade's Warning/Safety Operating Instructions Tag (Reorder No. **95903**) for safety information.

After maintenance is performed on tool, add a few drops of Dynabrade Air Lube (P/N **95842**) to the air line and start the tool a few times to lubricate air motor. Check for excessive tool vibration.

Handling and Storage:

- Use of tool rests and hangers are recommended.
- Protect tool inlet from debris (see Notice below).
- DO NOT carry tool by air hose.
- Protect abrasive accessories from exposure to water, solvents, high humidity, freezing temperature and extreme temperature changes.
- Store accessories in protective racks or compartments to prevent damage.

Machine Specifications

Model Number	Motor HP (W)	Motor RPM	Sound Level	Air Flow Rate CFM/SCFM (LPM)	Air Pressure PSIG (Bars)	Spindle Thread	Weight Pound (kg)	Length Inch (mm)	Height Inch (mm)
52675	1 (744)	9,000	81 dB(A)	5/36 (1,020)	90 (6.2)	3/8"-24 male	3.3 (1.5)	14-1/8 (359)	1-7/8 (48)
52676	1 (744)	12,000	82 dB(A)	5/38 (1,076)	90 (6.2)	3/8"-24 male	3.3 (1.5)	14-1/8 (359)	1-7/8 (48)
52677	1 (744)	15,000	83 dB(A)	5/39 (1,104)	90 (6.2)	3/8"-24 male	3.3 (1.5)	14-1/8 (359)	1-7/8 (48)
52678	1 (744)	18,000	81 dB(A)	6/40 (1,133)	90 (6.2)	3/8"-24 male	3.3 (1.5)	15-3/8 (389)	1-7/8 (48)
52679	1 (744)	20,000	80 dB(A)	6/44 (1,256)	90 (6.2)	3/8"-24 male	3.3 (1.5)	15-3/8 (389)	1-7/8 (48)
52695	1 (744)	9,000	81 dB(A)	5/36 (1,020)	90 (6.2)	3/8"-24 male	3.3 (1.5)	14-1/8 (359)	1-7/8 (48)
52696	1 (744)	12,000	82 dB(A)	5/38 (1,076)	90 (6.2)	3/8"-24 male	3.3 (1.5)	14-1/8 (359)	1-7/8 (48)
52697	1 (744)	15,000	83 dB(A)	5/39 (1,104)	90 (6.2)	3/8"-24 male	3.3 (1.5)	14-1/8 (359)	1-7/8 (48)
52698	1 (744)	18,000	81 dB(A)	6/40 (1,133)	90 (6.2)	3/8"-24 male	3.3 (1.5)	15-3/8 (389)	1-7/8 (48)
52699	1 (744)	20,000	80 dB(A)	6/44 (1,256)	90 (6.2)	3/8"-24 male	3.3 (1.5)	15-3/8 (389)	1-7/8 (48)

Additional Specifications: Air Inlet Thread 3/8" NPT • Hose I.D. Size 3/8" (10 mm) • Air Flow Rate Based At Max HP. • Air Pressure 90 PSIG Max

Notice

All Dynabrade motors use the highest quality parts and metals available and are machined to exacting tolerances. The failure of quality pneumatic motors can most often be traced to an unclean air supply or the lack of lubrication. Air pressure easily forces dirt or water contained in the air supply into motor bearings causing early failure. It often scores the cylinder walls and the rotor blades resulting in limited efficiency and power. Our warranty obligation is contingent upon proper use of our tools and cannot apply to equipment which has been subjected to misuse such as unclean air, wet air or a lack of lubrication during the use of this tool.

One Year Warranty

Following the reasonable assumption that any inherent defect which might prevail in a product will become apparent to the user within one year from the date of purchase, all equipment of our manufacture is warranted against defects in workmanship and materials under normal use and service. We shall repair or replace at our factory, any equipment or part thereof which shall, within one year after delivery to the original purchaser, indicate upon our examination to have been defective. Our obligation is contingent upon proper use of Dynabrade tools in accordance with factory recommendations, instructions and safety practices. It shall not apply to equipment which has been subject to misuse, negligence, accident or tampering in any way so as to affect its normal performance. Normally wearable parts such as bearings, contact wheels, rotor blades, etc., are not covered under this warranty.

1hp Extension Die Grinder

Complete Assembly Breakdown

Index Key

No.	Part #	Description
1	**50012**	Collet Cap
2	**50013**	1/4" Collet Insert
	50016	6 mm Collet Insert
3	**50011**	Collet Body
4	**96512**	Retainer Ring
5	**51956**	Felt Seal
6	**01007**	Bearing (2)
7	**51955**	Spindle Extension
8	**51952**	Handle Extension
9	**54520**	Bearing
10	**51982**	Spacer
11	**51935**	Coupling (2)
12	**51936**	Insert Coupling
13	**96498**	Wave Spring
14	**95438**	O-Ring
15	**53620**	Adapter
16	**54520**	Bearing
17	**51951**	Shim Pack
18	**51922**	Front Bearing Plate
19	**96441**	Pin (2)
20	**51927**	Spacer
21	**51921**	Rotor
22	**51926**	Blade (4/Pkg.)
23	**51925**	Cylinder
24	**51923**	Rear Bearing Plate
25	**02057**	Bearing
26	**96445**	Pin (2)
27	**51924**	Gasket
28	**Governor Assembly**	
	51934	9,000 RPM Models
	51930	12,000 RPM Models
	51931	15,000 RPM Models
	51932	18,000 RPM Models
	51933	20,000 RPM Models
29	**All Housings Include:**	
	Warning & Specification Labels	
	53757	Housing – Model **52675**
	53758	Housing – Model **52676**
	53759	Housing – Model **52677**
	53760	Housing – Model **52678**
	53761	Housing – Model **52679**
	53773	Housing – Model **52695**
	53774	Housing – Model **52696**
	53775	Housing – Model **52697**
	53776	Housing – Model **52698**
	53777	Housing – Model **52699**
30	**96444**	Pin
31	**51949**	Safety Lever Assembly
32	**51946**	Valve Stem Assembly (Incl. **96443** O-Ring)
33	**51945**	Valve Seat
34	**51944**	Tip Valve
35	**51943**	Spring
36*	**96442**	O-Ring
37*	**51940**	Spacer
38*	**53682**	Gasket
39*	**94528**	Felt Seal
40*	**53686**	Muffler Cap
41*	**94924**	Wave Spring
42*	**53683**	Spacer
43*	**53681**	Inlet Bushing (Incl. 2 – **51938** Screens)
44	**51942**	Baffle
45	**51941**	Spring
46	**51939**	Silencer Plate
47	**51937**	Inlet Bushing (Incl. 2 – **51938** Screens)

Label Key

No.	Part #	Description
42	**00001180**	Warning Label
43	**00001181**	Specification Label

*** Note:** All parts indicated by an asterisk are included in **53655** Muffler Assembly.

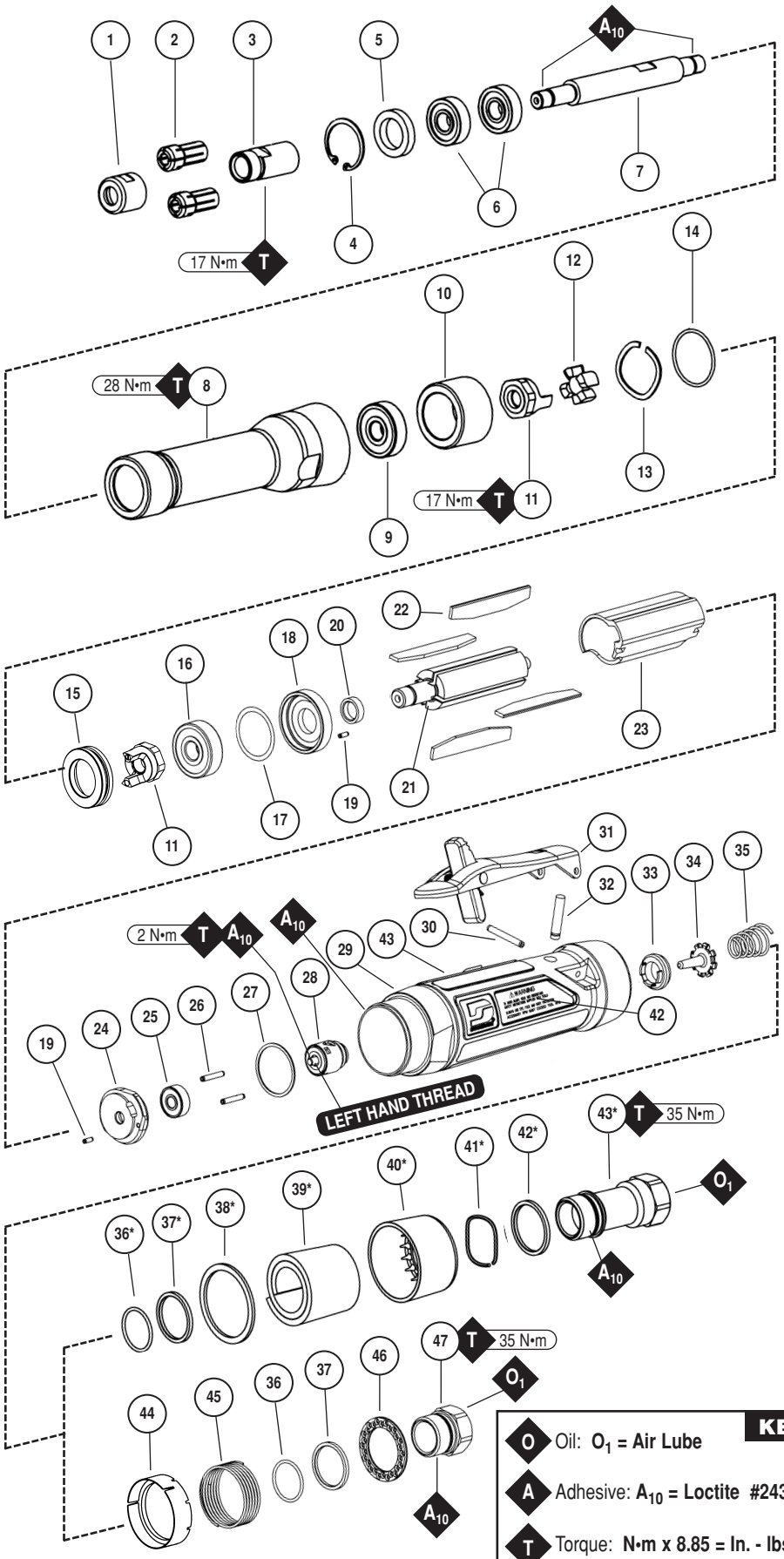

KEY

- **O** Oil: **O_1 = Air Lube**
- **A** Adhesive: **A_{10} = Loctite #243**
- **T** Torque: **N•m x 8.85 = In. - lbs.**

Always follow adhesive manufacturers cleaning and priming recommendations.

Disassembly Instructions - 1hp Extension Die Grinder

Important: Manufacturer's warranty is void if tool is disassembled before warranty expires.
Disconnect tool from power source before tool repair.

Motor Disassembly:

1. Remove **50012** Collet Cap and collet insert.
2. Secure front end of housing in a padded vise, align the vise jaws with machined flat on the silver ring.
3. Apply wrench at wrench flats on **51952** Extension Handle to remove **51952** Extension Handle from housing.
4. Slide **51982** Bearing Spacer and spindle assembly through rear of **51952** Extension Handle.
5. Remove **96512** Retaining Ring from front of extension handle and remove **51956** Felt Seal.
6. Secure **51955** Spindle at wrench flats, and remove **50011** Collet Body and **51935** Coupler.
7. Secure **01007** Bearing and press **51955** Spindle through both **01007** Bearings.
8. Secure **54520** Bearing and press **51955** Spindle through **54520** Bearing.
9. Remove **96498** Wave Spring.
10. Pull motor assembly from housing assembly, and remove **53620** Motor Adapter with **95438** O-Ring.
11. Remove governor assembly by using a slotted screw driver. (**LEFT HAND THREAD**)
12. Secure **51925** Cylinder and place a 1/8" (3 mm) drift pin to the base of the internal thread and press the **51921** Rotor from the **02057** Rear Bearing.
13. Slide **02057** Rear Bearing from **51923** Rear Bearing Plate.
14. Remove **51925** Cylinder and **51926** Blades.
15. Secure **51921** Rotor in a padded vise and remove **51935** Extension Coupler (twist counterclockwise).
16. Slide **51922** Front Bearing Plate and **51927** Rotor Spacer from **51921** Rotor.
17. Slide **54520** Bearing and shims from **51922** Front Bearing Plate.

Motor Disassembly Complete.

Housing Disassembly:

1. Secure housing using **51989** Repair Collar (*see back cover for Optional Accessories*).
2. Remove inlet bushing (twist counterclockwise).
3. **For 9,000 – 15,000 RPM Models**; Remove **51943** Spring, **96442** O-Ring, **51940** Spacer and **51939** Silencer Plate from **51937** Inlet Bushing. Remove **51941** spring and **51942** Baffle from housing.
4. **For 18,000 & 20,000 RPM Models**; Remove **53682** Gasket, **51943** Spring, **96442** O-Ring, **51940** Spacer, **94528** Felt Silencer, **53686** Muffler Cap, **94924** Wave Spring and **53683** Spacer from **53681** Inlet Bushing.
5. Remove **51944** Tip Valve and **51945** Valve Seat.
6. Remove housing and **51989** Repair Collar and lay repair collar on bench with flange facing down so the collar is supported by throttle lever. Place a 3/32" (2.4 mm) drift pin on **96444** Pin and tap pin thru housing.
7. Remove **51946** Valve Stem Assembly. Remove **96443** O-Ring from **51946** Valve Stem Assembly.

Housing Disassembly Complete.

Assembly Instructions - 1hp Extension Die Grinder

Motor Assembly:

Important: Be sure parts are clean and in good repair before assembling. Follow grease, oil and torque specifications.

1. Place **51921** Rotor into padded vise with male thread facing upwards.
2. Slip **51927** Rotor Spacer over rotor shaft and down against rotor body face.
3. Press **96441** Coiled Pin into **51922** Front Bearing Plate. Make certain, coiled pin does not protrude beyond internal bearing surface.
4. Place a .002" shim into the base of **51922** Front Bearing Plate as an initial spacing and slide **54520** Bearing to the front plate base. **Note: 51951** Shim Pack contains .001" and .002" shims.
5. Slip bearing/bearing plate assembly onto rotor, torque **51935** Extension Coupler onto rotor shaft to 17 N•m (150 lb.-in.).
6. Check clearance between rotor and front bearing plate by using a .001" feeler gauge. Clarence should be between .001" – .0015". Adjust clarence by repeating steps 4 and 5 with different shims if necessary.
7. Once proper rotor gap clarence is achieved, install well lubricated **51926** Blades (4) into rotor slots. Dynabrade recommends lubricating blades with **95842** Air Lube.
   Important: Make certain beveled edge of blade follows rotor outside diameter.
8. Install **51925** Cylinder over rotor and front plate raised boss. Align coiled pin on front to cylinder slot.
9. Press **96441** Coiled Pin into blind hole on **51923** Rear Bearing Plate. Press (2) **96445** Coiled Pins into the back side of rear bearing plate.
10. Peel backing off **51924** Gasket and align it firmly in place onto **51923** Rear Bearing Plate.
11. Place **51923** Rear Bearing Plate over rotor mandrel and insert raised boss on rear bearing plate into cylinder diameter, while inserting short coiled pin into cylinder slot. Be sure inlet slot on rear bearing plate line up with inlet slot on cylinder. Flip cylinder end to end and repeat step 8 for correct assembly.

(Continued on next page.)

Assembly Instructions - (Continued)

Important: Manufacturer's warranty is void if tool is disassembled before warranty expires.
Please refer to parts breakdown for part identification.

12. Press **02057** Bearing onto rotor and onto **51923** Rear Bearing Plate until it is seated. **Important:** Cylinder must fit snug between bearing plates. If too tight, rotor will not turn freely. Rotor must be lightly tapped at press fit end until rotor spins freely while still maintaining a snug fit. A loose fit will not achieve the proper preload on motor bearing.
    (While pressing 02057 Bearing, make certain to contact inner race of bearing only.)
13. Add one drop of Loctite® 243 (or equiv.) to governor assembly male thread and screw governor assembly onto place (**LEFT HAND THREAD**) with a slotted screw head. Torque to 2 N•m (18 lb.-in.).
14. Install motor assembly into housing, making sure motor drops all the way into housing. **Note:** Align both **96445** Coiled Pins to slots in insert and against **51924** Gasket.
15. Insert **95438** O-Ring onto **53620** Adapter and slide adapter into housing and over **54520** Bearing.
16. Place **96498** Wave Washer onto **53620** Adapter.
17. Place **51936** Coupling Insert into **51935** Coupling. Make certain insert radii aligns with radii in coupling base, to correct alignment remove insert and rotate 90˚.
18. Press one **01007** Bearing on end of **51955** Extension Spindle that is further from the wrench flats, then repeat with second **01007** Bearing on same end of spindle. **Important:** While pressing **01007** Bearings, make certain to contact inner race of bearing only.
19. Press **54520** Bearing onto end of spindle that is closer to wrench flats. **Important:** While pressing **54520** Bearing, make certain to contact inner race of bearing only.
20. Secure spindle and apply Loctite® #243 (or equiv.) to external threads then torque **51935** Coupling on single bearing end to 17 N•m (150 lb.-in.).
21. On double bearing end, apply Loctite® #243 (or equiv.) to external threads and torque **50011** Collet Body to 17 N•m (150 lb.-in.).
22. Install **51956** Felt Seal over **50011** Collet Body.
23. Install **96512** Retaining Ring into groove inside **51952** Extension Handle.
24. Insert spindle assembly, with **50011** Collet Body first, into larger diameter end of **51952** Extension Handle.
25. Insert **51982** Bearing Spacer into larger diameter end of extension handle.
26. Pull **51936** Coupling Insert half way off of **51935** Coupling.
27. Apply Loctite® 567 (or equiv.) to external threads just above machined flats on housing.
28. Align **51936** Coupling Insert onto **51935** Coupling in extension handle.
29. Thread housing assembly onto extension handle.
30. Secure front end of housing in a padded vise, align the vise jaws with machined flat on the silver ring.
31. Apply wrench at wrench flats on **51952** Extension Handle and torque handle onto housing to 28 N•m (250 lb.-in.).

Motor Assembly Complete.

Housing Assembly:

1. Secure housing using **51989** Repair Collar. *(see back cover for Optional Accessories)* With flange facing downward.
2. Slide **96443** O-Ring onto **51946** Valve Stem and slide sub-assembly until o-ring passes through housing hole. Make certain valve stem assembly slides freely after the o-ring passes through the hole.
3. Install **51945** Valve Seat by aligning 3 male prongs with three deep slots on insert. Make certain valve seat is pressed flat against base of pocket. **Note:** Add a few drops of Dynabrade Air Lube (P/N **95842**) to pocket walls before inserting **51945** Valve Seat.
4. Install **51944** Tip Valve as shown.
5. For **9,000 – 15,000 RPM** Models; Slide **51942** Baffle into housing long end in first, and place **51941** Spring into shallow wall end of baffle.
6. For **9,000 – 15,000 RPM** Models; Pre-assemble **51937** Inlet Bushing by sliding **51939** Silencer Plate, **51940** Spacer over male thread and set **96442** O-Ring into groove at the base of thread. Slide **51943** Spring into bushing and up to the two **51938** Screens.
7. For **18,000 & 20,000 RPM** Models; Pre-assemble muffler, slide **53683** Spacer over **53681** Inlet Bushing and up against the hex head base. Slide **94924** Wave Spring over **53681** Inlet Bushing and up against spacer. Pre-roll **94528** Felt and install it in **53686** Muffler Cap, support felt in felt/muffler cap assembly and slide **53681** Inlet Bushing thru the inside until the muffler cap assembly seats against **94924** Wave Spring. Flare the felt and place **52940** spacer over male thread, and set **96442** O-Ring into groove at the base of thread, return felt to unflared form.
8. For **18,000 & 20,000 RPM** Models; Place **53682** Gasket over felt silencer and against **53686** muffler Cap.
9. Apply one drop of Loctite® #243 (or equiv.) to **51937** Inlet Bushing thread.
10. Align small inside diameter of **51943** Spring to cone point on **51944** Tip Valve and thread **51937** Inlet Bushing and sub-assembly into place. Torque bushing to 35 N•m (310 lb.-in.).
11. Remove housing from **51989** Repair Collar and replace repair collar onto the bench top with the part number identifier against the bench. Align the throttle lever holes to housing pin hole and rest the housing and throttle lever onto the legs of the repair collar. Press **96444** Coiled Pin into lever hole and center into housing.

Tool Assembly Complete. Please allow 30 minutes for adhesives to cure before operating tool.

Important: Before operating, place 2-3 drops of Dynabrade Air Lube (P/N **95842**) directly into inlet with throttle lever depressed. Operate tool for 30 seconds to allow Air Lube to properly lubricate internal motor components. Motor should now be tested for proper operation at 90 PSIG max. If tool operates at a higher RPM than marked on the tool or if vibration and sound levels seem abnormal, the tool should be serviced to correct the cause before use.

Loctite® is a registered trademark of Loctite Corp.

Preventative Maintenance Schedule

For All 1hp Extension Die Grinders

This service chart is published as a guide to expectant life of component parts. The replacement levels are based on average tool usage over one year. Dynabrade Inc. considers one year usage to be 1,000 hours.

LEGEND	
T	Included in Tune-Up Kit
X	Type of wear, no other comments apply.
L	Easily lost. Care during assembly/disassembly.
D	Easily damaged during assembly/disassembly.
R	Replace each time tool is disassembled.



96532 – 1 Hp. Motor Tune-Up Kit

Parts Common to all Models:

Index #	Part Number	Description	Number Required	High Wear 100%	Medium Wear 70%	Low Wear 30%	Non-Wear 10%
1	**50012**	Collet Cap	1				**X**
2	**50013**	1/4" Collet Insert	1			**X**	
	50016	6 mm Collet Insert	1			**X**	
3	**50011**	Collet Body	1				**X**
4	**96512**	Retainer Ring	1				**X**
5	**51956**	Felt Seal	1		**X**		
6	**01007**	Bearing	2			**X**	
7	**51955**	Spindle Extension	1				**X**
8	**51952**	Handle Extension	1				**X**
9	**54520**	Bearing	1		**X**		
10	**51982**	Spacer	1				**X**
11	**51935**	Coupling	2				**X**
12	**51936**	Insert Coupling	1				**X**
13	**96498**	Wave Spring	1		**T**		
14	**95438**	O-Ring	1		**T**		
15	**53620**	Adapter	1				**X**
16	**54520**	Bearing	1		**T**		
17	**51951**	Shim Pack (3/pkg)	1		**T**		
18	**51922**	Front Bearing Plate				**X**	
19	**96441**	Pin	2			**X**	
20	**51927**	Spacer	1		**T**		
21	**51921**	Rotor	1			**X**	
22	**51926**	Blade (4/pkg)	1	**T**			
23	**51925**	Cylinder	1			**X**	
24	**51923**	Rear Bearing Plate	1			**X**	
25	**02057**	Bearing	1		**T**		
26	**96445**	Pin	2			**X**	
27	**51924**	Gasket	1		**T**		
28		Governor Assembly					
	51934	9,000 RPM	1				**X**
	51930	12,000 RPM	1				**X**
	51931	15,000 RPM	1				**X**
	51932	18,000 RPM	1				**X**
	51933	20,000 RPM	1				**X**
29	**See Note**	Housing (Incl. Labels)					**X**
30	**96444**	Pin	1		**T**		
31	**51949**	Safety Lever Assembly	1			**X**	
32	**51946**	Valve Stem Assembly	1		**T**		
		(Incl. **96443** O-Ring)					
33	**51945**	Valve Seat	1				**X**
34	**51944**	Tip Valve	1		**T**		
35	**51943**	Spring	1				**X**
36	**96442**	O-Ring	1		**T**		
37	**51940**	Spacer	1				**X**
38	**53682**	Gasket	1				**X**
39	**94528**	Felt Seal	1				**X**
40	**53686**	Muffler Cap	1				**X**
41	**94924**	Wave Spring	1				**X**
42	**53683**	Spacer	1				**X**
43	**53681**	Inlet Bushing	1				**X**
		(Incl.2 – **51938** Screens)					
44	**51942**	Baffle	1				**X**
45	**51941**	Spring	1				**X**
46	**51939**	Silencer Ring	1				**X**
47	**51937**	Inlet Bushing	1				**X**
		(Incl.2 – **51938** Screens)					

Note: Please refer to page 4 of tool manual for specific part number.

Optional Accessories



96005 Male Plug
- Provides up to twice the air flow compared to standard plug design.
- Plug has "ported" design to prevent "starving" of the air tool.



Dynaswivel®
- Swivels 360° AT TWO PIVOT POINTS allowing the air hose to drop directly to the floor while providing superb tool handling.

95461 – 3/8" NPT



Dynabrade Air Lube
- Formulated for pneumatic equipment.
- Absorbs up to 10% of its weight in water.
- Prevents rust and formation of sludge.
- Keeps pneumatic tools operating longer with greater power and less down time.

95842: 1pt. (473 ml)
95843: 1gal. (3.8 L)

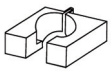

51989 Repair Collar
- Specially designed collar for use in vise to prevent damage to valve body of tool during disassembly/assembly.

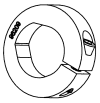

96209 Motor Repair Clamp
- Specially designed clamp to secure motor cylinder before disassembly.



Bearing Press Tools
- Used to install bearings.

96243: For installing **02057** Bearing.
96244: For installing **01007** & **54520** Bearings.



Collet Inserts
- **50065** – 1/8"
- **50013** – 1/4"
- **50014** – 3/8"
- **50016** – 6 mm
- **50039** – 8 mm



Wrenches
- **95262** – 14 mm Open-end
- **95263** – 17 mm Open-end



96532 Motor Tune-Up Kit
- Includes assorted parts to help maintain and repair motor.

01902 Drop-In Motor
- Allows quick and easy replacement. No motor adjustments needed.



Composite-Style Coupler
- Lightweight 1.4 oz. (.05 Kg), non-marring composite material.
- Easy connect/disconnect by single push-button action.
- Shock-proof, low-vibration, crush-resistant.

94960: 1/4" Female NPT
94980: 1/4" Male NPT



53621 Over Hose Assembly
- Over Hose Assembly directs exhaust away from operator.



Carbide Burr Kits
- Includes 12 burrs for grinding, deburring and finishing metal.

93351 – 1/8" Kit
93350 – 1/4" Kit
93380 – 6 mm Kit



- **50010** – 1/4" Collet Assembly.
- **50015** – 6 mm Collet Assembly.



53690 Extension Grip
- Provides added ergonomic comfort and control when handling tool.



30335 Air Supply Hose
- 3/8 in. I.D. x 60 in. Wide air supply hose, includes: 3/8 in. NPT male and female threaded fittings.

Reference Contact Information

1. **American National Safety Institute – ANSI**
   25 West 43rd Street
   Fourth Floor
   New York, NY 10036
   Tel: 1 (212) 642-4900
   Fax: 1 (212) 398-0023

2. **Government Printing Office – GPO**
   Superintendent of Documents
   Attn. New Orders
   P.O. Box 371954
   Pittsburgh, PA 15250-7954
   Tel: 1 (202) 512-1803

3. **European Committee for Standardization**
   Rue de Stassart 36
   B - 1050 Brussels, Belgium

Visit Our Web Site: www.dynabrade.com

Email: Customer.Service@Dynabrade.com

DYNABRADE®

DYNABRADE, INC., 8989 Sheridan Drive • Clarence, NY 14031-1490 • Phone: (716) 631-0100 • Fax: 716-631-2073 • International Fax: 716-631-2524
DYNABRADE EUROPE S.àr.l., Zone Artisanale • L-5485 Wormeldange—Haut, Luxembourg • Telephone: 352 76 84 94 1 • Fax: 352 76 84 95 1

© DYNABRADE, INC., 2005
PRINTED IN USA
PD01.70R_04/05