Models:

57220 – 5" Non-Vacuum
57221 – 5" Vac-Ready
57222 – 5" Basic Vac
57223 – 5" Deluxe Vac
57224 – 5" Central Vac-Ready
57225 – 6" Non-Vacuum
57226 – 6" Vac-Ready
57227 – 6" Basic Vac
57228 – 6" Deluxe Vac
57229 – 6" Central Vac-Ready

For Serial No. 1B1848 and Higher

Parts Page Reorder No. PD01•60
Effective June, 2001
Supersedes PD00•78

Dynalocke™ Dual Action Sander

Air Motor and Machine Parts

⚠WARNING **Always operate, inspect and maintain this tool in accordance with the Safety Code for portable air tools (ANSI B186.1) and any other applicable safety codes and regulations. Please refer to Dynabrade's Warning/Safety Operating Instructions for more complete safety information. See inside for Important Operating, Maintenance and Safety Instructions.**

Index Key

No.	Part #	Description
1		**Sanding Pads**
	56104	5" Vacuum
	56105	6" Vacuum
	56106	5" Non-Vacuum
	56107	6" Non-Vacuum
2	**95858**	Shim
3	**95859**	Shim
4	**57369**	Shroud
5	**57262**	Balancer Shaft
6	**95630**	Snap Ring
7	**95628**	Bearing Shield
8	**56053**	Bearing Seal
9	**56052**	Balancer Bearing
10		**Motor Shaft Balancer**
	57268	– 5"
	57269	– 6"
11	**54673**	Rotor Key
12	**96166**	Set Screw
13	**57332**	Lock Ring
14	**02695**	Bearing
15	**54630**	Front Plate
16	**54705**	Rotor/Blade Set
17	**54631**	Cylinder Assy.
18	**95865**	Line-Up Pin
19	**54629**	Rear Plate
20	**01206**	Bearing
21	**56713**	Lock Assy.
22	**56712**	Switch (Bottom)
23	**95529**	O-Ring
24		**Housing**
	57230	5" Non-Vac
	57231	5" Vac-Ready
	57232	5" Central Vac
	57237	6" Non-Vac
	57238	6" Vac Ready
	57239	6" Central Vac
25	**96252**	Spring
26	**56705**	Post - Cap
27	**57264**	Post Assembly
28	**56711**	Switch (Top)
29	**96489**	Screw
30	**95523**	O-Ring (2)
31	**57382**	Gasket (Non-Vac)
	57383	Gasket (Vac)
32	**56671**	Handle
33	**96123**	Screw (2)
34	**57396**	Valve Stem
35	**95886**	Flat-Washer (4)
36	**01211**	Lock Washer (6)
37	**97010**	Screw (4)
38	**01464**	Seal (2)
39	**01472**	Tip Valve
40	**01468**	Conical Spring
41	**56673**	Gasket
42	**96328**	O-Ring
43	**98597**	Retaining Ring
44	**01089**	Safety Lever
45	**01017**	Pin
46	**56672**	Adapter
47	**01024**	O-Ring (2)
48	**57343**	Speed Regulator
49	**96421**	Flat-Washer (2)
50	**01788**	Screw (2)
51	**01494**	Inlet Bushing
52	**54199**	Muffler Seat (Non-Vacuum)
53	**54195**	Muffler (3) (Non-Vacuum)
54	**54194**	Muffler Cap (Non-Vacuum)

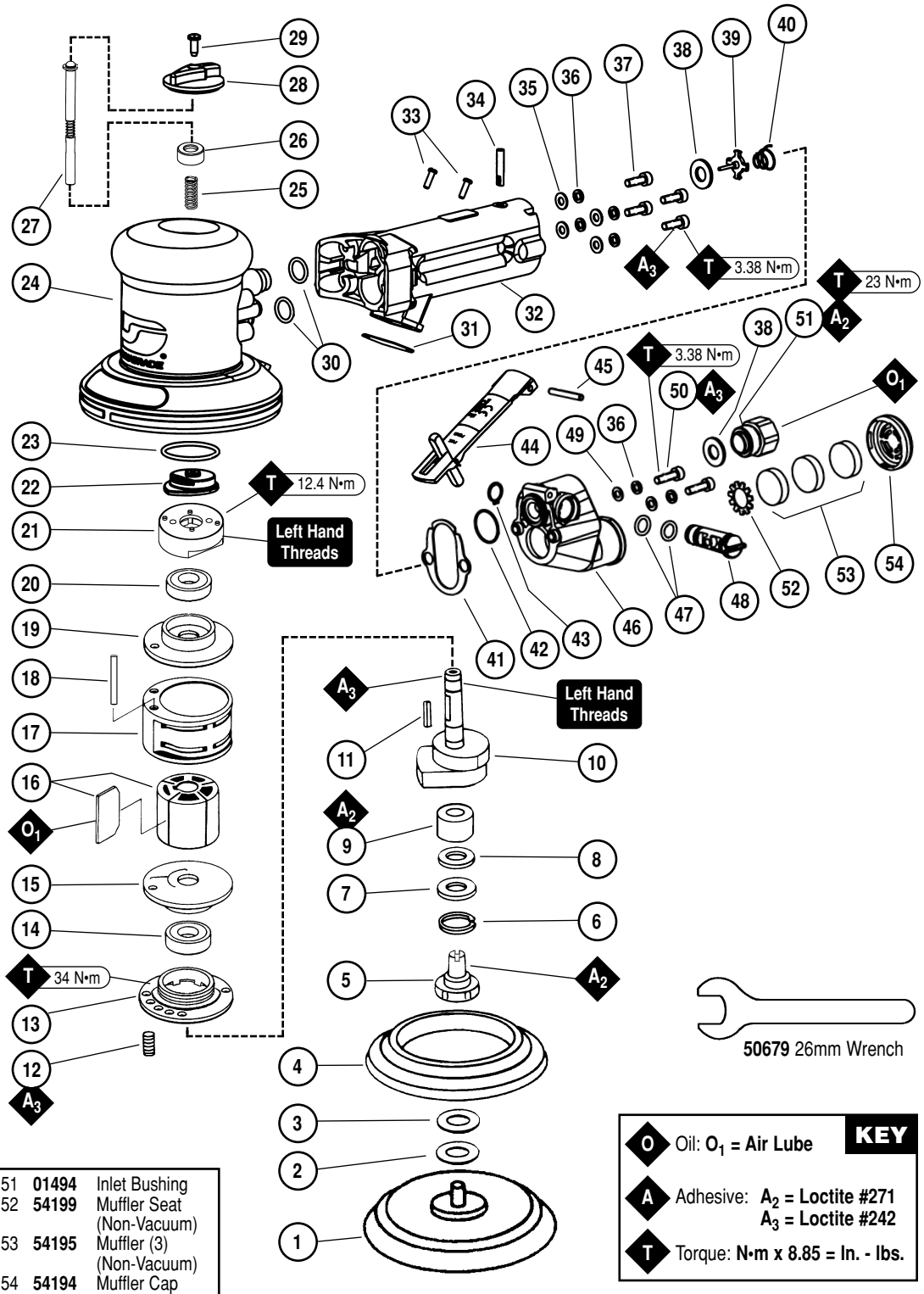

50679 26mm Wrench

KEY

- **O** Oil: **O_1 = Air Lube**
- **A** Adhesive: **A_2 = Loctite #271**, **A_3 = Loctite #242**
- **T** Torque: **N•m x 8.85 = In. - lbs.**

Note: To order replacement parts specify the Model# and Serial# of your machine.

Important Operating, Maintenance and Safety Instructions

Carefully read all instructions before operating or servicing any Dynabrade® Abrasive Power Tool.
Warning: Hand, wrist and arm injury may result from repetitive work motion and overexposure to vibration.
Important: All Dynabrade Rotary Vane air tools must be used with a filter-regulator-lubricator to maintain all warranties.

Operating Instructions:

Warning: Eye, face, respiratory, sound and body protection must be worn while operating power tools. Failure to do so may result in serious injury or death Follow safety procedures posted in workplace.

1. With power source disconnected from tool, securely fasten abrasive/sanding pad on tool.
2. Connect power source to tool. Be careful **not** to depress throttle lever in the process.
3. Check tool speed with tachometer. If tool is operating at a higher speed than the RPM marked on the tool or operating improperly, the tool should be serviced to correct the cause before use.
4. To avoid the danger of contaminating the workpiece from the lubricating oils permeating the air or sanding dust, it is recommended that this machine be hooked up to a central vacuum system or one of our unique vacuum systems that gather all such contaminants in a paper or cloth dust bag. This self contained vacuum system is highly efficient and convenient to use since it does not need to be attached to a separate vacuum system and is as mobile as the machine itself.

Maintenance Instructions:

1. All Dynabrade Rotary Vane air motors should be lubricated. Dynabrade recommends one drop of air lube per minute for each 10 SCFM (example: if the tool specifications state 40 SCFM, set the drip rate of your filter-lubricator at 4 drops per minute).
   Dynabrade Air Lube (P/N **95842**: 1 pt. 473 ml.) is recommended.
2. An Air Line Filter-Regulator-Lubricator must be used with this air tool to maintain all warranties. Dynabrade recommends the following: **11405** Air Line Filter-Regulator-Lubricator — Provides accurate air pressure regulation, two-stage filtration of water contaminants and positive-drip lubrication of pneumatic components. Operates up to 40 SCFM @ 100 PSIG has 3/8" NPT female ports.
3. Frequent drainage of water traps in air lines is recommended.
4. Some silencers on air tools may clog with use. Clean and replace as required.
5. A Motor Tune-Up Kit (**P/N 96122**) is available which includes assorted parts to help maintain and refresh motor.

Safety Instructions:

Products offered by Dynabrade should not be converted or otherwise altered from original design without expressed written consent from Dynabrade, Inc.



- **Important:** User of tool is responsible for following accepted safety codes such as those published by the American National Standards Institute.
- Tool RPM must never exceed abrasive/sanding pad RPM rating, regardless of tool capacity.
- Operate machine for 30 seconds before application to workpiece to determine if machine is working properly and safely before work begins.
- Always disconnect power supply before changing abrasive or making machine adjustments.
- Inspect abrasives and sanding pads for damage or defects prior to and during operation of tool.
- Please refer to Dynabrade's Warning/Safety Operating Instructions Tag (Reorder No. **95903**) for more complete safety information.
- **Warning:** Hand, wrist and arm injury may result from repetitive work, motion and overexposure to vibration.

Notice

All Dynabrade motors use the highest quality parts and metals available and are machined to exacting tolerances. The failure of quality pneumatic motors can most often be traced to an unclean air supply or the lack of lubrication. Air pressure easily forces dirt or water contained in the air supply into motor bearings causing early failure. It often scores the cylinder walls and the rotor blades resulting in limited efficiency and power. Our warranty obligation is contingent upon proper use of our tools and cannot apply to equipment which has been subjected to misuse such as unclean air, wet air or a lack of lubrication during the use of this tool.

Note: To order replacement parts specify the model and serial number of your machine.

Full One Year Warranty

Following the reasonable assumption that any inherent defect which might prevail in a product will become apparent to the user within one year from the date of purchase, all equipment of our manufacture is warranted against defects in workmanship and materials under normal use and service. We shall repair or replace at our factory, any equipment or part thereof which shall, within one year after delivery to the original purchaser, indicate upon our examination to have been defective. Our obligation is contingent upon proper use of Dynabrade tools in accordance with factory recommendations, instructions and safety practices. It shall not apply to equipment which has been subject to misuse, negligence, accident or tampering in any way so as to affect its normal performance. Normally wearable parts such as bearings, contact wheels, rotor blades, etc., are not covered under this warranty.

Model Number	Motor HP (W)	Motor RPM	Sound Level	Air Flow Rate CFM/SCFM (LPM)	Air Pressure PSIG (Bars)	Air Inlet Thread	Weight Pound (kg)	Length Inch (mm)	Height Inch (mm)
5" Models	.4 (298)	12,000	82 dB(A)	4/25 (708)	90 (6.2)	1/4" NPT	2.8 (1.27)	10-1/4 (260)	5 (127)
6" Models	.4 (298)	12,000	82 dB(A)	4/25 (708)	90 (6.2)	1/4" NPT	2.9 (1.31)	10-1/4 (260)	5 (127)

Additional Specifications: Hose I.D. Size 3/8" (10mm)

Motor Assembly/Disassembly Instructions

Important: Manufacturers warranty is void if tool is disassembled before warranty expires.
These instructions are for use in conjunction with Part Number 57260 Repair Kit, which includes special tools for proper disassembly/assembly of tool. A complete Tune-Up Kit, part number 96122, is available which includes assorted parts to help maintain and repair motor.

To Disassemble:

1. Invert machine and secure in vice, using **57092** Collar (supplied in **57260** Repair Kit) or padded jaws.
2. Remove sanding pad with **50679** Open-End Wrench (supplied with sander).
3. Using a 2mm hex key remove the **96166** Set Screw.
4. Insert **56058** Lock Ring Wrench (supplied in **57260** Repair Kit) into corresponding tabs of lock ring and unscrew. Motor may now be lifted out for service.
5. **a.**) Remove **57264** Post, **56705** Post Cap, and **96252** Spring from top of motor. These parts should freely fall from motor assembly. Upper motor can now be disabled.
   b.) Using a 26mm wrench, unscrew (left handed thread) **56713** Lock Assembly from **57268** or **57269** Motor Shaft Balancer.
6. Using a small #2 arbor press remove the rear plate assembly by securing the **54631** Cylinder in a standard 2 inch bearing separator or use a standard bearing puller gripped on the cylinder inlet/exhaust area. Push the motor shaft balancer through the bearing. Remove cylinder, rotor, vanes and key.
7. Remove **54630** Front Plate and **02695** Front Motor Bearing, using a standard 2 inch bearing separator.
8. Disassemble the balancer assembly as follows:
   a.) Remove **95630** Snap Ring. Screw the threaded portion of the **56056** Bearing Puller (supplied in **57260** Repair Kit) into the **57262** Balancer Shaft. **Note:** Heat the outside of the motor shaft balancer to approximately 200° F. Now, using the slider weight, pull the assembly out.
   b.) Press off **56052** Bearing and remove loose parts.
9. If during step 8, the **56052** Bearing remains in the motor shaft balancer, it can be removed by heating the shaft balancer again and using either an inside bearing puller or a blind hole bearing puller.

To Assemble:

Important: Be certain parts are clean and in good repair before assembling.

1. Assemble the balancer assembly as follows:
   a.) Install **95630** Snap Ring onto **57262** Balancer Shaft. Install **95628** Shield with convex face toward hex of balancer shaft.
   b.) Install **56053** Bearing Seal. **Note:** Be certain seal is pressed completely over shaft step.
   c.) Apply a slight amount of #271 Loctite® (or equivalent) to inside diameter of the **56052** Bearing and the outside diameter of the **57262** Balancer Shaft.
   d.) Press fit **56052** Bearing, with seal side toward hex of balancer shaft, up to shaft step using **57091** Bearing Press Tool (supplied in **57260** Repair Kit) (Drawing 1).
2. Place the motor shaft balancer in a soft jaw vise with large end-up.
3. Apply a slight amount of #271 Loctite® (or equivalent) and spread over several places around the outside diameter of the **56052** Bearing and slide balancer shaft assembly into the motor shaft balancer until **56052** Bearing is firmly seated at bottom. Squeeze **95630** Snap Ring into groove in motor shaft balancer to complete the assembly. Remove from vise.

Drawing 1

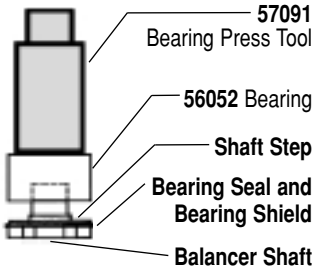

4. Press **02695** Bearing onto the motor shaft balancer down to the shoulder using **57091** Bearing Press Tool (Drawing 2).
5. Place **57332** Lock Ring onto shaft with lock ring assembly facing balancer shaft assembly.
6. Place **54630** Front Bearing Plate onto **02695** Bearing and check for smooth rotation (Drawing 3).
7. Place **54673** Rotor Key, **54705** Rotor, and blade set onto shaft. **Note:** Be certain rotor "floats" easily on the shaft. Because the design of this motor uses a "floating rotor". There is no need to set or adjust gap between the rotor and the end plates.
8. Place **54631** Cylinder over rotor. The "short" line-up pin goes toward the **54630** Front Bearing Plate.
9. Place **54629** Rear Bearing Plate and **01206** Rear Bearing over shaft and "long" end of line-up pin and press into place (Drawing 4).
10. **a.**) Clean exterior threads on **57268** or **57269** Motor Shaft Balancer and apply a slight amount of #271 Loctite® or equivalent.
    b.) Tighten **56713** Lock Assembly onto **57268** or **57269** Shaft Balancer to 12.4 N•m.
    c.) Drop **96252** Spring, **56705** Post Cap, and **57264** Post Assembly in thru hole of shaft balancer.

(continued on next page)

Drawing 2

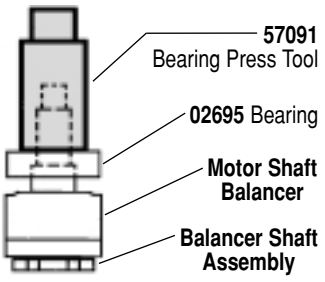

Drawing 3

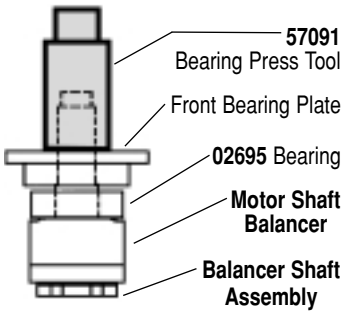

Drawing 4

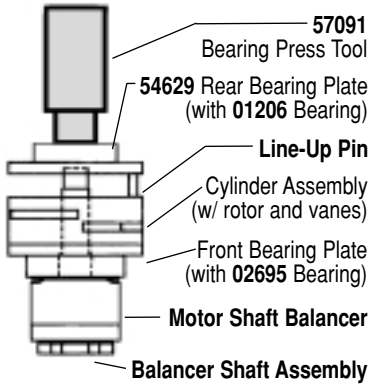

Motor Disassembly/Assembly Instructions *(continued)*

11. Grease the rubber seals inside the housing using a small amount of multipurpose grease or petroleum jelly.
Note: Be certain that rubber seals in housing have not pulled out of their seat during disassembly. If this has happened re-seat seals by pushing them until they are flush with inside diameter.
12. Slide motor assembly into housing. **Note:** With handle pointing down be certain line-up pin enters slot to the right of center.
13. Secure motor housing in a vise, using **57092** Collar or soft jaws (be careful not to over tighten tool in vise).
14. Pull up on counter balance so that approximately 1/4" of the motor is visible above the threads of the housing. Slip **57332** Lock Ring over counter balance and push down lock ring with **56058** Lock Ring Wrench turning it clockwise to tighten lock ring in place. Torque: (34 N•m/300 in. - lbs.)
15. Apply a small amount of #242 Loctite (or equivalent) to threads of **96166** Set Screw. Use a 2mm hex key and install set screw into the housing through one of the holes in the lock ring until set screw is flush with the top of the lock ring.

To Disassemble Valve And Speed Regulator Assemblies:

1. Invert tool and place in soft jaw vise or use **57092** Repair Collar.
2. Loosen and remove **01788** Screws (2), **01211** Lock Washers (2) and **96421** Flat Washers (2) from **56672** Adapter.
3. Carefully remove **56672** Adapter making sure no parts fall to the ground. On non-vacuum models pry off **54194** Muffler Cap and remove **54195** Muffler (3).
4. Remove **57343** Speed Regulator by detaching **98597** Retaining Ring with a pair of retaining ring pliers. Remove **01024** O-Rings with a small screwdriver.
5. Remove tip valve, valve seal and valve stem from housing.

To Assemble Valve And Speed Regulator Assemblies:

1. Lightly lubricate **01024** O-Rings and slide them on **57343** Speed Regulator. Install through regulator hole on **56672** Adapter. Place **98597** Retaining Ring on groove of speed regulator using a pair of retaining ring pliers.
2. Line-up hole in valve stem with inlet hole in handle. Place **01464** Seal in handle. Insert **01472** Tip Valve so that metal pin goes through the valve stem. Place **01468** Spring into the housing, small end first.
3. Install **98597** O-Ring onto **56672** Adapter and place **56673** Gasket onto handle.
4. Gently line-up **56672** Adapter onto handle so no parts shift when tightening. Apply #242 Loctite® to **01788** Screws (2), install along with **01211** Lock Washers (2) and **96421** Flat Washers (2).

Motor Assembly Complete. Please allow 30 minutes for adhesives to cure before operating tool.

Important: Motor should operate at 12,000 RPM at 6.2 bar (90 PSIG). RPM should be checked with a tachometer. Before operating, we recommend that 3-4 drops of pneumatic tool oil be placed directly into the air inlet with throttle lever depressed. Operate tool for 30 seconds to determine if machine is operating properly and to allow lubricating oils to properly dispense through machine.

To Change Disc Pads:

Insert **50679** Wrench on flats of **57262** Balancer Shaft. Twist off sanding pad by hand. With wrench still in place, hand tighten new pad on tool. No need to remove shroud or overskirt.

Required Weight of Pads:

5" Models – Use pad weighing 100g.
6" Models – Use pad weighing 130g.

Loctite® is a registered trademark of the Loctite Corp.

Accessories



54290 "Bag-in-Box" System

- **95361** Air Line 5' long.
- **50682** Flex-Hose 1" dia. x 6' long.
- **95362** Rubber Connectors (5).
- **95575** Durable Box Receptacle.
- Sample paper bag included.
  Paper bag reorder:
  50692 (400/case) or
  50693 (24 per package.)



50617, 56303 – 6' Long Flex-Hose Systems

50617: Has **50683** Standard Reusable Felt Bag with hook 'n loop end for easy emptying.

56303: Has **56304** Zipper-Lock Bag.

- Both systems include 6' long **50682** Flex-Hose.
- Shown with optional **95361** Air Line (1/4").



57260 Motor Repair Kit:

- Contains special tools for Disassembly/Assembly of machine.



57344 Throttle Lever

- A **57396** Valve Stem must be used in conjunction with this lever to function properly.



96122 Motor Tune-Up Kit:

- Includes assorted parts to help maintain and repair motor.

Visit Our Web Site: www.dynabrade.com

Email: Customer.Service@Dynabrade.com

DYNABRADE®

DYNABRADE, INC., 8989 Sheridan Drive • Clarence, NY 14031-1490 • Phone: (716) 631-0100 • Fax: 716-631-2073 • International Fax: 716-631-2524
DYNABRADE EUROPE S.àr.l., Zone Artisanale • L-5485 Wormeldange—Haut, Luxembourg • Telephone: 352 76 84 94 1 • Fax: 352 76 84 95 1

©DYNABRADE, INC., 2003
PRINTED IN USA
PD01.60_Rev.1_12/03