For Serial No. 1B1000 and Higher

Parts Page Reorder No. PD01•53
Effective June, 2001

Models:
52331 — 25,000 RPM, 6 mm Collet
52333 — 30,000 RPM, 6 mm Collet
52335 — 25,000 RPM, 1/4" Collet
52337 — 30,000 RPM, 1/4" Collet

.4 Hp/7°/Rear Exhaust Die Grinder

Air Motor and Machine Parts

⚠WARNING **Always operate, inspect and maintain this tool in accordance with the Safety Code for portable air tools (ANSI B186.1) and any other applicable safety codes and regulations. Please refer to Dynabrade's Warning/Safety Operating Instructions for more complete safety information.**

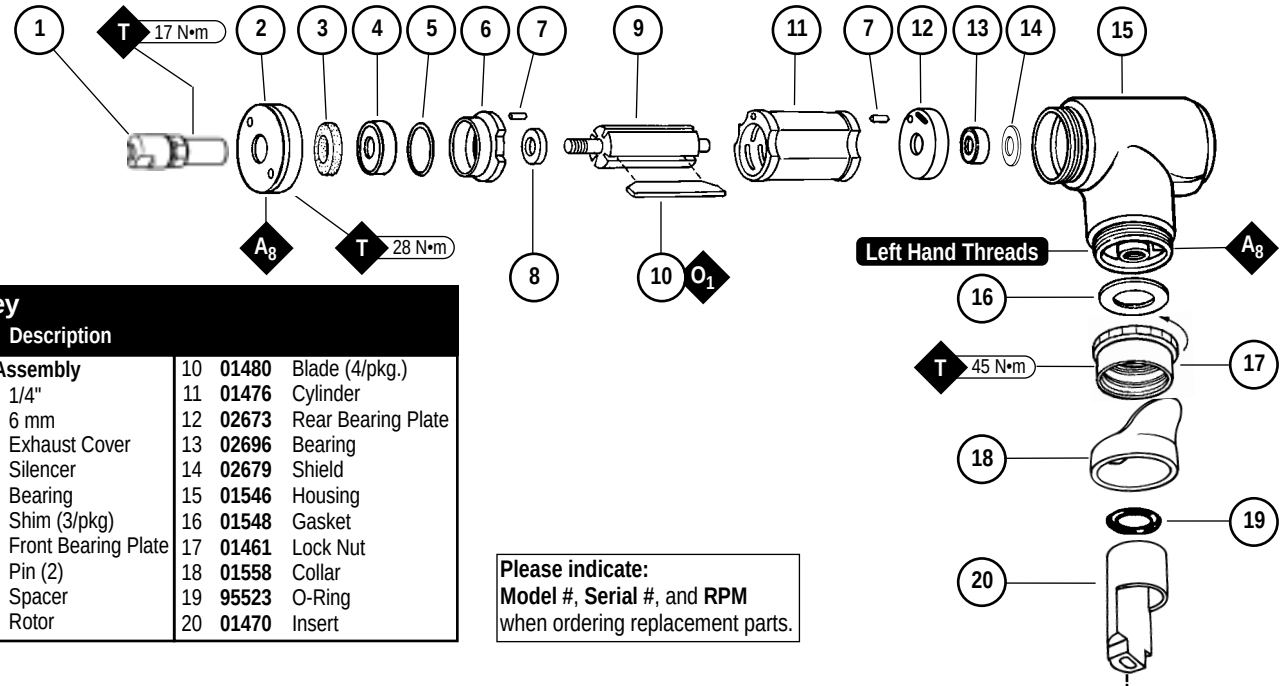

Index Key

No.	Part #	Description
1	**Collet Assembly**	
	50080	1/4"
	50079	6 mm
2	**01560**	Exhaust Cover
3	**01580**	Silencer
4	**02649**	Bearing
5	**54529**	Shim (3/pkg)
6	**01478**	Front Bearing Plate
7	**50767**	Pin (2)
8	**01479**	Spacer
9	**01475**	Rotor
10	**01480**	Blade (4/pkg.)
11	**01476**	Cylinder
12	**02673**	Rear Bearing Plate
13	**02696**	Bearing
14	**02679**	Shield
15	**01546**	Housing
16	**01548**	Gasket
17	**01461**	Lock Nut
18	**01558**	Collar
19	**95523**	O-Ring
20	**01470**	Insert

Please indicate:
Model #, **Serial #**, and **RPM**
when ordering replacement parts.

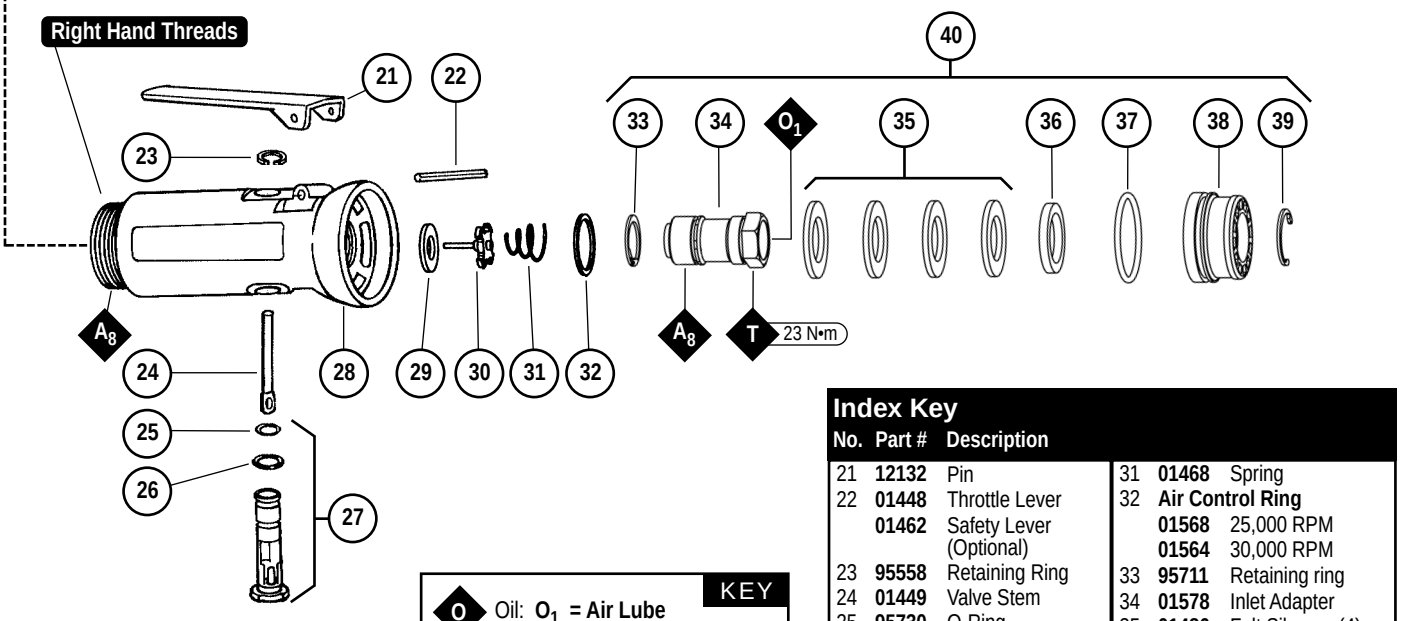

Index Key

No.	Part #	Description
21	**12132**	Pin
22	**01448**	Throttle Lever
	01462	Safety Lever (Optional)
23	**95558**	Retaining Ring
24	**01449**	Valve Stem
25	**95730**	O-Ring
26	**01024**	O-Ring
27	**01469**	Regulator
28	**01488**	Housing
29	**01464**	Seal
30	**01472**	Tip Valve
31	**01468**	Spring
32	**Air Control Ring**	
	01568	25,000 RPM
	01564	30,000 RPM
33	**95711**	Retaining ring
34	**01578**	Inlet Adapter
35	**01486**	Felt Silencer (4)
36	**01379**	Bronze Muffler
37	**96065**	O-Ring
38	**01446**	Air Deflector
39	**95620**	Retaining Ring
40	**94535**	Muffler Assembly

KEY

O Oil: O_1 = **Air Lube**

A Adhesive: A_8 = **Loctite #567**

T Torque: **N•m x 8.85 = In. - lbs.**

See reverse side for Accessories and Important Operating, Maintenance and Safety Instructions.

Important Operating, Maintenance and Safety Instructions

Carefully read all instructions before operating or servicing any Dynabrade® Abrasive Power Tool.
Warning: Hand, wrist and arm injury may result from repetitive work motion and overexposure to vibration.
Important: All Dynabrade Rotary Vane air tools must be used with a Filter-Regulator-Lubricator to maintain all warranties.

Operating Instructions:

Warning: Eye, face, respiratory, sound and body protection must be worn while operating power tools. Failure to do so may result in serious injury or death. Follow safety procedures posted in workplace.

1. With power source disconnected from tool, securely fasten abrasive/accessory on tool.
2. Install air fitting into inlet bushing of tool. **Important:** Secure inlet bushing of tool with a wrench before attempting to install the air fitting to avoid damaging valve body housing.
3. Connect power source to tool. Be careful **not** to depress throttle lever in the process.
4. Check tool speed with tachometer. If tool is operating at a higher speed than the RPM marked on the tool or operating improperly, the tool should be serviced to correct the cause before use.

Maintenance Instructions:

1. Check tool speed regularly with a tachometer. If tool is operating at a higher speed than the RPM marked on the tool, the tool should be serviced to correct the cause before use.
2. Some silencers on air tools may clog with use. Clean and replace as required.
3. All Dynabrade Rotary Vane air motors should be lubricated. Dynabrade recommends one drop of air lube per minute for each 10 SCFM (example: if the tool specifications states 40 SCFM, set the drip rate of your filter-lubricator at 4 drops per minute).
   Dynabrade Air Lube (P/N **95842**: 1pt. 473ml.) is recommended.
4. An Air Line Filter-Regulator-Lubricator must be used with this air tool to maintain all warranties. Dynabrade recommends the following: **11405** Air Line Filter-Regulator-Lubricator — Provides accurate air pressure regulation, two-stage filtration of water contaminants and micro-mist lubrication of pneumatic components. Operates 40 SCFM @ 100 PSIG has 3/8" NPT female ports.
5. Use only genuine Dynabrade replacement parts. To reorder replacement parts, please specify the **Model #**, **Serial #** and **RPM** of your machine.
6. A Motor Tune-Up Kit (P/N **96049**) is available which includes assorted parts to help maintain motor in peek operating condition.
7. Mineral spirits are recommended when cleaning the tool and parts. Do not clean tool or parts with any solvents or oils containing acids, esters, keytones, chlorinated hydrocarbons or nitro carbons.

Safety Instructions:

Products offered by Dynabrade should not be converted or otherwise altered from original design without expressed written consent from Dynabrade, Inc.



- **Important:** User of tool is responsible for following accepted safety codes such as those published by the American National Standards Institute (ANSI).
- Operate machine for one minute before application to workpiece to determine if machine is working properly and safely before work begins.
- Always disconnect power supply before changing abrasive/accessory or making machine adjustments.
- Inspect abrasives/accessories for damage or defects prior to installation on tools.
- Please refer to Dynabrade's Warning/Safety Operating Instructions Tag (Reorder No. **95903**) for more complete safety information.
- **Warning:** Hand, wrist and arm injury may result from repetitive work, motion and overexposure to vibration.

Notice

All Dynabrade motors use the highest quality parts and metals available and are machined to exacting tolerances. The failure of quality pneumatic motors can most often be traced to an unclean air supply or the lack of lubrication. Air pressure easily forces dirt or water contained in the air supply into motor bearings causing early failure. It often scores the cylinder walls and the rotor blades resulting in limited efficiency and power. Our warranty obligation is contingent upon proper use of our tools and cannot apply to equipment which has been subjected to misuse such as unclean air, wet air or a lack of lubrication during the use of this tool.

One Year Warranty

Following the reasonable assumption that any inherent defect which might prevail in a product will become apparent to the user within one year from the date of purchase, all equipment of our manufacture is warranted against defects in workmanship and materials under normal use and service. We shall repair or replace at our factory, any equipment or part thereof which shall, within one year after delivery to the original purchaser, indicate upon our examination to have been defective. Our obligation is contingent upon proper use of Dynabrade tools in accordance with factory recommendations, instructions and safety practices. It shall not apply to equipment which has been subject to misuse, negligence, accident or tampering in any way so as to affect its normal performance. Normally wearable parts such as bearings, contact wheels, rotor blades, etc., are not covered under this warranty.

Model Number	Motor HP (W)	Motor RPM	Air Inlet Thread	Sound Level	Air Flow Rate CFM/SCFM (LPM)	Air Pressure PSIG (Bars)	Spindle Thread	Weight Pound (kg)	Length Inch (mm)	Height Inch (mm)
52331/52335	.4 (298)	25,000	1/4" NPT	76 dB(A)	3/20 (566)	90 (6.2)	M8 x 1.0 Male	1 (.5)	6 (152)	3-3/4 (94)
52333/52337	.4 (298)	30,000	1/4" NPT	79 dB(A)	3/20 (566)	90 (6.2)	M8 x 1.0 Male	1 (.5)	6 (152)	3-3/4 (94)

Additional Specification: Hose I.D. Size 1/4" (8 mm)

Disassembly/Assembly Instructions - .4 Hp/7˚/Rear Exhaust

Important: Manufacturer's warranty is void if tool is disassembled before warranty expires.

Notice: Dynabrade strongly recommends the use of their 52296 Repair Collar (sold separately) during assembly/disassembly activities. Failure to use this collar will highly increase the risk of damage to the valve body of this tool. Please refer to parts breakdown for part identification.

Motor Disassembly:

1. Secure air tool in vise using **52296** Repair Collar or padded jaws.
2. Remove collet cap and insert.
3. With an adjustable pin wrench, remove **01560** Exhaust Cover by turning counter-clockwise. Remove muffler insert.
4. Pull motor assembly from housing.
5. Press rotor from **02696** Rear Bearing. Press **02696** Bearing from **02673** Rear Bearing Plate.
6. Remove **01435** Collet Body from rotor shaft. Twist collet counter clockwise from shaft.
7. Remove **02649** Front Bearing, bearing plate, cylinder, blades (4) and **01479** Spacer from rotor.
   Note: 02649 Bearing is a slip fit into **01478** Front Bearing Plate.

Motor Disassembly Complete.

Motor Assembly:

Important: Be sure parts are clean and in good repair before assembling.

1. Place **01475** Rotor in padded vise with threaded spindle facing upward.
2. Slip **01479** Spacer onto rotor.
3. Place a .002" shim into **01478** Front Bearing Plate as an initial spacing (**Note: 54529** Shim Pack contains .001", .002", and .003" shims) and slip **02649** Bearing into plate.
4. Install bearing/bearing plate assembly onto rotor.
5. Tighten **01435** Collet Body onto rotor (torque to 17 N•m/150 in. - lbs.).
6. Check clearance between rotor and bearing plate by using a .001" feeler gauge. Clearance should be at .001" to .0015". Adjust clearance by repeating steps 1-5 with different shim if necessary.
7. Once proper rotor/gap clearance is achieved, install well lubricated **01480** Blades (4) into rotor slots.
   Dynabrade Air Lube P/N **95842** is recommended for lubrication.
8. Install cylinder over rotor.
9. Press **02696** Rear Bearing into **02673** Rear Bearing Plate. Press bearing/bearing plate assembly onto rotor. Be sure that pin and air inlet holes line-up with pin slot and air inlet holes in cylinder. **Important:** Fit must be snug between bearing plates and cylinder. A loose fit will not achieve the proper pre-load of motor bearings. If too tight, rotor will not turn freely. Rotor must then be lightly tapped at press fit end so it will turn freely while still maintaining a snug fit.
10. Secure housing in vise using **52296** Repair Collar.
11. Place **02679** Shield over **02696** Rear Bearing and Install motor assembly into housing. Be sure motor fits all the way into housing.
12. Assemble **01580** Silencer into **01560** Exhaust Cover and install onto motor housing (torque 28 N•m/250 in. - lbs.).
13. Motor adjustment must now be checked. With motor housing still mounted in vise, pull end of rotor and twist (10-15 lbs. force), rotor should turn freely without drag. If drag or rub is felt, then increase preload or remove shim. Also, push end of rotor and twist (10-15 lbs. force), rotor should turn freely without drag. If drag or rub is felt, then deload or add shim.

Motor Assembly Complete.

Valve Body Disassembly:

1. Position valve body in a vise by using **52296** Repair Collar so that air inlet points up.
2. Secure **01578** Inlet Adapter with a wrench to prevent it from turning. While holding the inlet adapter stationary remove the air fitting by turning it counterclockwise.
   Important: 01578 Inlet Adapter must be secured before attempting to remove the air fitting so as to avoid damaging the valve body housing.
3. Remove **01578** Inlet Adapter.
4. Remove **95711** Retaining Ring from inlet adapter. Then remove **01486** Felt Silencer (4), and **01379** Bronze Muffler.
5. Remove **01568** or **01564** Air Control Ring from the valve body housing. Use needle nose pliers and remove **01468** Spring, **01472** Tip Valve and **01464** Seal.
6. Use a 2.5 drive punch to remove **12132** Pin and **01448** or **01462** Throttle Lever.
7. Remove **95558** Retaining Ring and push **01469** Regulator from the valve body housing.

Valve Body Disassembly Complete.

Valve Body Assembly:

1. Install **01469** Regulator complete with o-rings and valve stem into valve body housing. Secure it in place with **95558** Retaining Ring.
2. Place valve body housing in a vise, holding it with the aid of **52296** Repair Collar so that the air inlet openings points up.
3. Insert **01464** Seal into the air inlet opening so that it lays flat.
4. Line up hole in valve stem with inlet opening in housing (looking past brass bushing). Install **01472** Tip Valve so that the metal pin passes through the hole in the valve stem. Install **01478** Spring (small end against tip valve).
5. Position **01581** or **01564** Air Control Ring around inlet opening. Place **01279** Bronze Muffler inside **01446** Air Deflector.
6. With **95620** Retaining Ring installed on female threaded end of **01578** Inlet Adapter insert the inlet adapter through **01446** Air Deflector.
7. Place **01486** Felt Silencer (4) inside **01446** Air Deflector.

(Continued on next page)

Disassembly/Assembly Instructions (continued)

8. Install **95711** Retaining Ring into groove at the male threaded end of the inlet adapter. Install **96065** O-Ring into groove on the air defector.
9. Apply Loctite® #567 (or equivalent) to the male threads of the **01578** Inlet Adapter and install muffler assembly onto valve body housing (torque to 23 N•m/200 in.-lbs.).
10. Install **01448** or **01462** Throttle Lever onto valve body housing with **12132** pin.
11. Secure **01578** Inlet Adapter with a wrench to prevent it from turning. While holding the inlet adapter stationary install the air fitting by turning it clockwise. **Important: 01578** Inlet Adapter must be secured before attempting to install the air fitting so as to avoid damaging the valve body housing.

Notice: To adjust throttle body orientation for a rear exhaust tool:

1. Use **52296** Repair Collar to secure valve body in vise with **01546** Housing facing up.
2. Peel down **01558** Collar to expose the nut portion of **01461** Lock Nut.
3. Using a 34 mm crows foot and firmly holding motor housing, turn **01461** Lock Nut counterclockwise to loosen assembly.
4. Adjust orientation of the throttle lever to agree with your grip and comfort level allowing for additional rotation due to torquing.
5. Using the 34 mm crows foot torque **01461** Lock Nut to 45 N•m/400 in.-lbs. while firmly holding motor housing in place to reduce housing rotation.

Tool Assembly Complete. Please allow 30 minutes for adhesives to cure before operating tool.

Important: Motor should now be tested for proper operation at 90 PSIG. If motor does not operate properly or operates at a higher RPM than marked on the tool, the tool should be serviced to correct the cause before use.

Loctite® is a registered trademark of Loctite Corp.

Optional Accessories

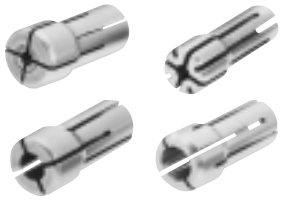

Collet Inserts

- **01485** 1/4"
- **01497** 6 mm
- **01495** 1/8"
- **01496** 3 mm

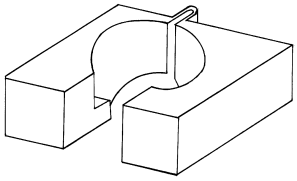

52296 Repair Collar

- Specially designed collar for use in vise to prevent damage to valve body housing during disassembly/assembly.



96049 Motor Tune-Up Kit

- Includes assorted parts to help maintain and repair motor.



Dynaswivel®

Swivels 360° at two locations which allows an air hose to drop straight to the floor, no matter how the tool is held.

- **94300** 1/4" NPT.



50971 Lock Ring Tool

- Lock Ring Tool has a 3/8 in. square socket for use with 3/8 in. drive; breaker bar, ratchet head, or torque wrenches.

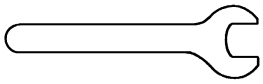

Open-End Wrenches

96076 – 12 mm open-end.

95262 – 14 mm open-end.

DYNABRADE®

Visit our Web Site: www.dynabrade.com **Email:** Customer.Service@Dynabrade.com

DYNABRADE, INC., 8989 Sheridan Drive • Clarence, NY 14031-1490 • Phone: (716) 631-0100 • Fax: 716-631-2073 • International Fax: 716-631-2524
DYNABRADE EUROPE S.àr.l., Zone Artisanale • L-5485 Wormeldange—Haut, Luxembourg • Telephone: 352 76 84 94 1 • Fax: 352 76 84 95 1

© DYNABRADE, INC., 2001

PRINTED IN USA