1 hp Die Grinder
Governor Controlled

PD01-12R
Effective February, 2018
Supersedes PD01•12

Air Tool Manual – Safety, Operation and Maintenance

SAVE THIS DOCUMENT, EDUCATE ALL PERSONNEL

Models:

52665 – 9,000 RPM, 1/4" & 6 mm
52666 – 12,000 RPM, 1/4" & 6 mm
52667 – 15,000 RPM, 1/4" & 6 mm
52668 – 18,000 RPM, 1/4" & 6 mm
52669 – 20,000 RPM, 1/4" & 6 mm



Find The Most Current Offering of Support Documents and Accessories at www.Dynabrade.com

⚠ WARNING

Read and understand this tool manual before operating your air tool. Follow all safety rules for the protection of operating personnel as well as adjacent areas. Always operate, inspect and maintain this tool in accordance with the American National Standards Institute (ANSI). Safety Requirements for the Use, Care and Protection of Abrasive Wheels – ANSI B7.1, Compressed Air and Gas Institute (CAGI) Safety Code for Portable Air Tools – B186.1, Code of Federal Regulation – CFR 29 Part 1910, International Organization for Standardization (ISO) Hand Held Non-Electric Power Tools – Safety Requirements and applicable State and Local Regulations.

Carefully read and understand the General and Die Grinder sections found in Tool Safety & Operating Guidelines (PN00001676) before handling or using tool.

Eye protection must be worn at all times, eye protection to conform to ANSI Z87.1.

Ear protection to be worn when exposure to sound, exceeds the limits of applicable Federal, State or local statues, ordinances and/or regulations.

Practice safety requirements. Work alert, have proper attire, and do not operate tools under the influence of alcohol or drugs.

Respiratory protection to be used when exposed to contaminants that exceed the applicable threshold limit values required by law.

Air line hazard, pressurized supply lines and flexible hoses can cause serious injury. Do not use damaged, frayed or deteriorated air hoses and fittings.

Some dust created by sanding, grinding, drilling, and other construction activities contain chemicals known to cause cancer, birth defects or other reproductive harm. Some examples of these chemicals are:

- Lead from lead-based paints
- Crystalline silica from bricks and cement and other masonry products
- Arsenic and chromium from chemically treated lumber

Your risk from these exposures varies, depending on how often you do this type of work. To reduce your exposure to these chemicals: work in a well ventilated area, and work with approved safety equipment, such as those dust masks that are specially designed to filter out microscopic particles.

SAFETY INSTRUCTIONS

Carefully Read all instructions before operating or servicing any Dynabrade® Abrasive Power Tool.
Products offered by Dynabrade are not to be modified, converted or otherwise altered from the original design without expressed written consent from Dynabrade, Inc.

Tool Intent: Die Grinders are ideal for removal and polishing of materials using properly speed-rated (RPM) deburring, cleaning and polishing accessories.

Do Not Use Tool For Anything Other Than Its Intended Applications.

Training: Proper care, maintenance, and storage of your tool will maximize its performance.

- Employer's Responsibility – Provide grinder operators with safety instructions and training for safe use of tools and accessories.

Accessory Selection:

- Abrasive/accessory RPM (speed) rating MUST be approved for AT LEAST the tool RPM rating.
- Before mounting an accessory, visually inspect for defects. Do not use defective accessories.
- Mount only recommended accessories. See back page of manual and Dynabrade catalog.
- Follow tool specifications before choosing size and type of accessory.
- Only use recommended fittings and air line sizes. (See tool Machine Specifications table.)
- DO NOT use – cut off wheels or router bits.

OPERATING INSTRUCTIONS

Warning: Always wear eye protection. Operator of tool is responsible for following: accepted eye, face, respiratory, hearing and body protection.

Caution: Hand, wrist and arm injury may result from repetitive work, motion and overexposure to vibration.

(continued on next page)

OPERATING INSTRUCTIONS (continued)

- Keep hand and clothing away from working end of the air tool.

Operation: Be sure that any loose clothing, hair and all jewelry is properly restrained.

- Secure inlet bushing on air tool with a wrench before attempting to install the air fitting to avoid damaging housing assembly.
- Check tool RPM (speed) with tachometer with air pressure set at 90 PSIG while the tool is running. If tool is operating at a higher speed than the RPM marked on the tool housing, or operating improperly, the tool must be serviced and corrected before use.

Caution: Tool RPM must never exceed abrasive/accessory RPM rating. Check accessory manufacturer for details on maximum operating speed or special mounting instructions.

- With power source disconnected from air tool, mount recommended accessory into collet assembly.
- The mandrel diameter of the abrasive/accessory must insert freely, but not loosely, all the way to the base of the collet body before tightening the collet cap. Use wrenches provided.

Caution: The mandrel shall be inserted to the full depth of the gripping jaws of the collet. At least one-half the mandrel length shall be inserted into the collet to prevent excessive overhang. Refer to accessory manufacturer's instructions for proper overhang. (Ref. ANSI B7.1)

Warning: Sliding the accessory's mandrel out from the collet insert creates an "OVER HANG" condition. This practice is NOT recommended, reducing the free speed of the tool by reducing the air pressure must be done to avoid cutting tool breakage and serious injury.

MANDREL MOUNTING

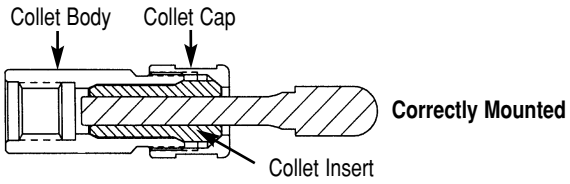

- Connect air tool to power source. Be careful NOT to depress throttle lever in the process. **Do not expose air tool to inlet pressure above 90 PSIG or (6.2 Bars).**

Caution: After installing the accessory, before testing or use and/or after assembling tool, the grinder must be started at a reduced speed to check for good balance. Gradually increase tool speed. DO NOT USE if tool vibration is excessive. Correct cause, and retest to insure safe operation.

- Make sure that work area is uncluttered, and visitors are at a safe range from the tools and debris.
- Use a vise or clamping device to hold work piece firmly in place.
- Do not apply excessive force on tool or apply "rough" treatment to it.
- Always work with a firm footing, posture and proper lighting.

Report to your supervisor any condition of the tool, accessories, or operation you consider unsafe.

Air System

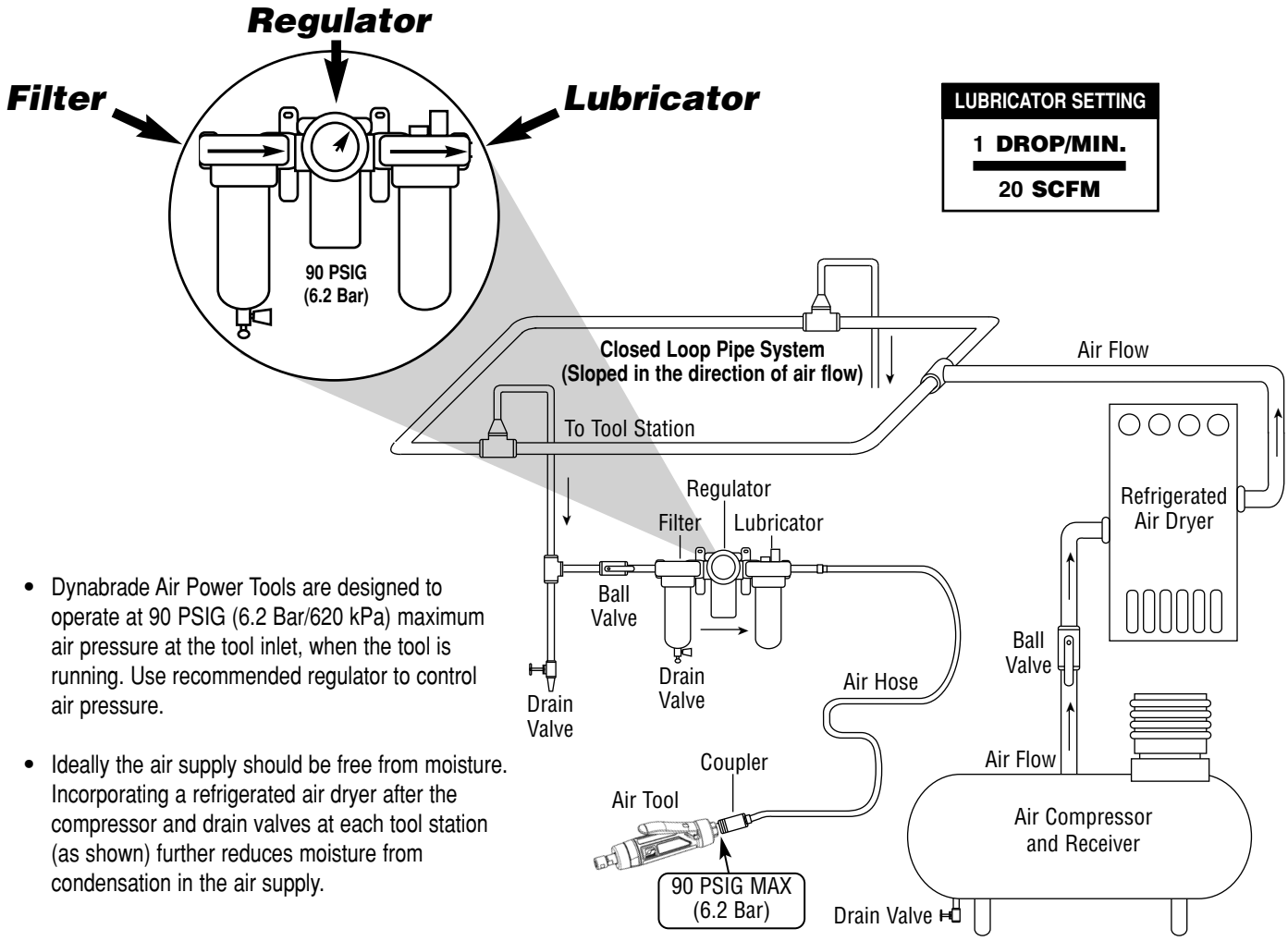

- Dynabrade Air Power Tools are designed to operate at 90 PSIG (6.2 Bar/620 kPa) maximum air pressure at the tool inlet, when the tool is running. Use recommended regulator to control air pressure.
- Ideally the air supply should be free from moisture. Incorporating a refrigerated air dryer after the compressor and drain valves at each tool station (as shown) further reduces moisture from condensation in the air supply.

Maintenance Instructions

Important: A Preventative Maintenance Program is recommended whenever portable grinders are used.

- Use only genuine Dynabrade replacement parts to insure quality. To order replacement parts, specify **Model#**, **Serial#** and **RPM** of your air tool.
- It is strongly recommended that all Dynabrade rotary vane air tools be used with a Filter-Regulator-Lubricator to minimize the possibility of misuse due to unclean air, wet air or insufficient lubrication. Dynabrade recommends the following: **11411** Air Filter-Regulator-Lubricator (FRL) – Provides accurate air pressure regulation and two stage filtration of water contaminants. Operates 55 SCFM/1,558 LPM@90 PSIG with 1/2" NPT female ports.
- Dynabrade recommends one drop of air lube per minute for each 10 SCFM (example: if the tool specification states 40 SCFM, set the drip rate on the filter-lubricator to 4 drops per minute). Dynabrade Air Lube (P/N **95842**: 1 pt 473 ml) is recommended.

Routine Preventative Maintenance: Check free speed of grinder using a tachometer. This governor controlled grinder should be speed checked every 20 hours of use or weekly, whichever occurs more frequently.

- DO NOT disassemble the governor for any reason. Reorder correct speed – governor assembly (See Assembly Breakdown) and recheck free speed of tool with a tachometer.
- Periodically remove the collet insert and clean the inside diameter and slots from debris to keep accessories secure and reduce vibration.
- Mineral spirits are recommended when cleaning the tool and parts. Do not clean tool or parts with any solvents or oils containing acids, esters, ketones, chlorinated hydrocarbons or nitro carbons.
- DO NOT clean or maintain tools with chemicals that have a low flash point (example: WD-40®).
- A Motor Tune-Up Kit (P/N **96532**) is available which includes high wear and medium wear motor parts.
- Air tool labels must be kept legible at all times, if not, reorder label(s) and replace. (See Assembly Breakdown)
- Blow air supply hose out prior to initial use.
- DO NOT carry tool by air hose or near the tool throttle lever.
- Visually inspect air hoses and fittings for frays, visible damage and signs of deterioration. Replace damaged or worn components.

After maintenance is performed on tool, add a few drops of Dynabrade Air Lube (P/N **95842**) to the air line and start the tool a few times to lubricate air motor. Check for excessive tool vibration.

Handling and Storage:

- Use of tool rests, hangers and/or balancers is recommended.
- Protect grinding wheels from exposure to water, solvents, high humidity, freezing temperatures and extreme temperature changes.
- DO NOT USE grinding wheels that have been dropped or show signs of cracks, nicks or other defects.
- Store accessories in protective racks or compartments to prevent damage.

Machine Specifications

Model Number	Motor HP (W)	Motor RPM	Air Inlet Thread	Maximum Air Flow CFM/SCFM (LPM)	Spindle Thread	Air Pressure PSIG (Bars)	Weight Pound (kg)	Length Inch (mm)	Height Inch (mm)
52665	1 (744)	9,000	3/8" NPT	5/36 (1,020)	3/8"-24 male	90 (6.2)	2.1 (1.0)	10 (253)	1-7/8 (48)
52666	1 (744)	12,000	3/8" NPT	5/38 (1,076)	3/8"-24 male	90 (6.2)	2.1 (1.0)	10 (253)	1-7/8 (48)
52667	1 (744)	15,000	3/8" NPT	5/39 (1,104)	3/8"-24 male	90 (6.2)	2.1 (1.0)	10 (253)	1-7/8 (48)
52668	1 (744)	18,000	3/8" NPT	6/40 (1,133)	3/8"-24 male	90 (6.2)	2.1 (1.0)	10 (253)	1-7/8 (48)
52669	1 (744)	20,000	3/8" NPT	6/44 (1,256)	3/8"-24 male	90 (6.2)	2.1 (1.0)	10 (253)	1-7/8 (48)

Additional Specifications: Hose Size 3/8" or 10mm • Air Flow Rate based at max hp • Visit dynabrade.com for your model's vibration and sound data.

Notice

All Dynabrade motors use the highest quality parts and metals available and are machined to exacting tolerances. The failure of quality pneumatic motors can most often be traced to an unclean air supply or the lack of lubrication. Air pressure easily forces dirt or water contained in the air supply into motor bearings causing early failure. It often scores the cylinder walls and the rotor blades resulting in limited efficiency and power. Our warranty obligation is contingent upon proper use of our tools and cannot apply to equipment which has been subjected to misuse such as unclean air, wet air or a lack of lubrication during the use of this tool.

Lifetime Warranty

All Dynabrade portable pneumatic power tools are rigorously inspected and performance tested in our factory before shipping to our customers. If a Dynabrade tool develops a performance problem and an inherent defect is found during normal use and service, Dynabrade will warrant this tool against defects in workmanship and materials for the lifetime of the tool. Upon examination and review at our factory, Dynabrade shall confirm that the tool qualifies for warranty status, and will repair or replace the tool at no charge to the customer. Normally wearable parts and products are NOT covered under this warranty. Uncovered items include bearings, contact wheels, rotor blades, regulators, valve stems, levers, shrouds, guards, O-rings, seals, gaskets and other wearable parts. Dynabrade's warranty policy is contingent upon proper use of our tools in accordance with factory recommendations, instructions and safety practices. It shall not apply to equipment that has been subjected to misuse, negligence, accident or tampering in any way so as to affect its normal performance. To activate lifetime warranty, customer must register each tool at www.dynabrade.com. Dynabrade will not honor lifetime warranty on unregistered tools. A one-year warranty will be honored on all unregistered portable pneumatic power tools. Lifetime warranty applies only to portable pneumatic tools manufactured by Dynabrade, Inc. in the USA. Lifetime warranty applies only to the original tool owner; warranty is non-transferable.

1 hp Die Grinder
Complete Assembly Breakdown

Index Key

No.	Part #	Description
1	**50012**	Collet Cap
2	**Collet Insert**	
	50013	1/4"
	50016	6mm
3	**51947**	Housing Cover
4	**96498**	Wave Spring
5	**95438**	O-Ring
6	**53620**	Motor Adapter
7	**50011**	Collet Body
8	**54520**	Bearing
9	**51951**	Shim Pack
10	**51922**	Front Bearing Plate
11	**96441**	Pin (2)
12	**51927**	Rotor Spacer
13	**51921**	Rotor
14	**51926**	Blade (4/pkg.)
15	**51925**	Cylinder
16	**51923**	Rear Bearing Plate
17	**02057**	Bearing
18	**96445**	Pin (2)
19	**51924**	Gasket
20	**Governor Assembly**	
	51930	12,000 RPM
	51931	15,000 RPM
	51932	18,000 RPM
	51933	20,000 RPM
	51934	9,000 RPM
21	**Housing**	
	53751	– Model **52665**
	51990	– Model **52666**
	51991	– Model **52667**
	51992	– Model **52668**
	51993	– Model **52669**
22	**96444**	Pin
23	**51949**	Safety Lever Assembly
24	**51946**	Valve Stem Assembly (Incl. **96443** O-Ring)
25	**51945**	Valve Seat
26	**51944**	Tip Valve
27	**51943**	Spring
28	**96442**	O-Ring
29	**51940**	Spacer
30	**53682**	Gasket
31	**94528**	Felt Silencer
32	**53686**	Muffler Cap
33	**94924**	Wave Spring
34	**53683**	Spacer
35	**53681**	Inlet Bushing (Incl. **51938** (2) screens)
36	**53655**	Muffler Assembly

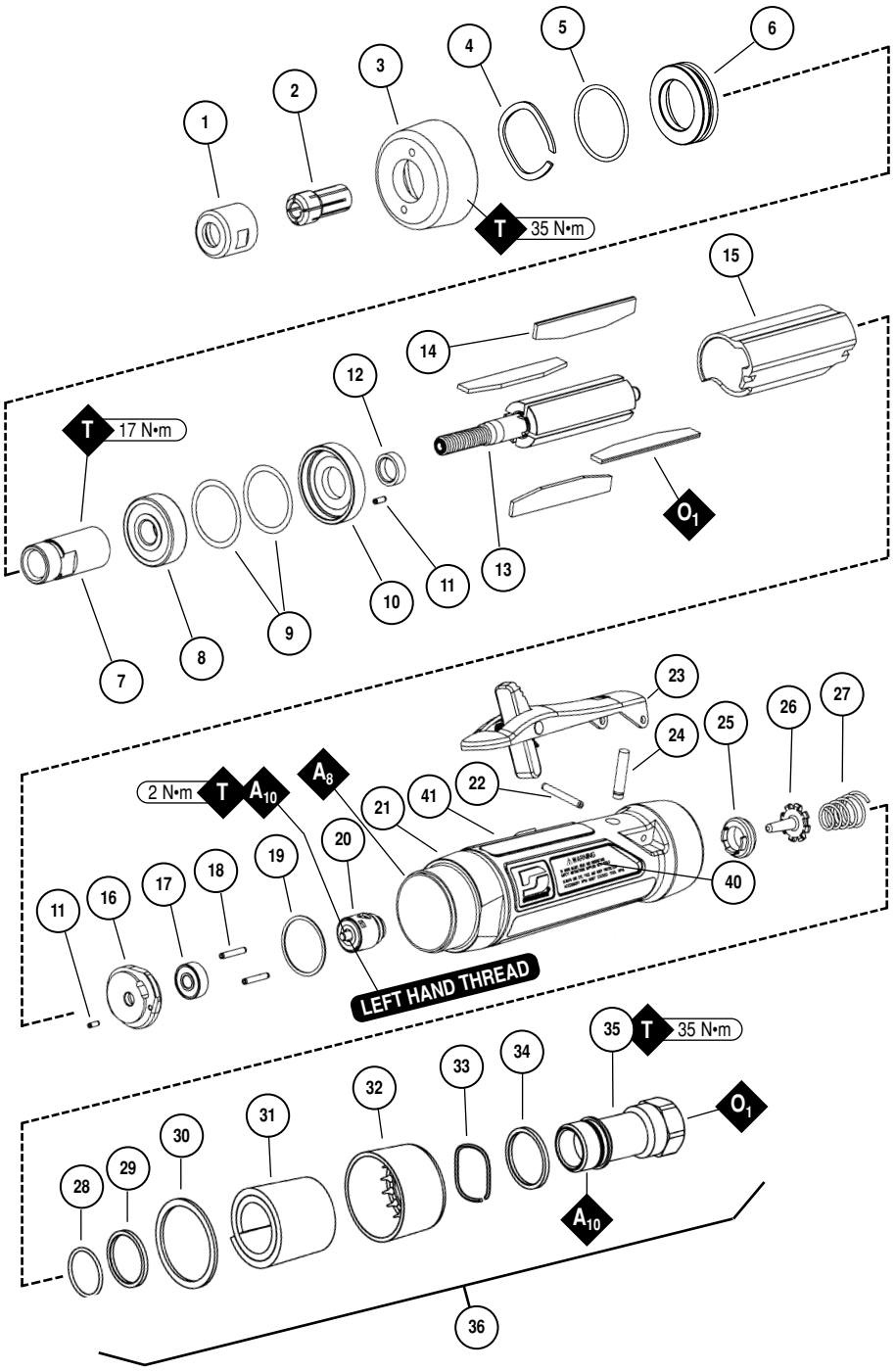

Label Key

No.	Part #	Description
40	**00001180**	Warning Label
41	**00001181**	Specification Label

KEY

- O — Oil: **O_1 = Air Lube**
- A — Adhesive: **A_8 = Loctite #567**, **A_{10} = Loctite #243**
- T — Torque: **N•m x 8.85 = In. - lbs.**

Always follow adhesive manufacturers cleaning and priming recommendations.

Disassembly Instructions - 1 hp Die Grinders

Important: Manufacturer's warranty is void if tool is disassembled before warranty expires.

Disconnect tool from power source before tool repair.

Motor Disassembly:

1. Remove **50012** Collet Cap and collet insert.
2. Secure front end of housing in a soft (aluminum or bronze jaw) vise, align the vise jaws with machined flat on the silver ring.
3. Using **50971** Pin Wrench (***order separately***) or an adjustable pin wrench, remove **51947** Housing Cover.
4. Remove remaining assembly from vise.
5. Remove **96498** Wave Spring.
6. Pull Motor Assembly from housing assembly, and remove **53620** Motor Adapter with **95438** O-Ring.
7. Remove Governor Assembly by using a slotted screw driver. (**LEFT HAND** thread)
8. Secure **51925** Cylinder and place a 1/8" (3mm) drift pin to the base of the internal thread and press the **51921** Rotor from the **02057** Rear Bearing.
9. Slide **02057** Rear Bearing from **51923** Rear Bearing Plate.
10. Remove **51925** Cylinder and **51926** Blades.
11. Secure **51921** Rotor in a soft (aluminum or bronze jaw) vise and remove **50011** Collet Body (twist counterclockwise).
12. Slide **51922** Front Bearing Plate and **51927** Rotor Spacer from **51921** Rotor.
13. Slide **54520** Bearing and shims from **51922** Front Bearing Plate. **Motor Disassembly Complete.**

Housing Disassembly:

1. Secure housing using **51989** Repair Collar (***see back cover for Optional Accessories***).
2. Remove inlet bushing with muffler assembly (twist counterclockwise).
3. Remove **53682** Gasket, **51943** Spring, **96442** O-Ring, **51940** Spacer, **94528** Felt Silencer, **53686** Muffler Cap, **94924** Wave Spring and **53683** Spacer from **53681** Inlet Bushing.
4. Remove **51944** Tip Valve and **51945** Valve Seat.
5. Remove housing and **51989** Repair Collar and lay collar on bench with flange facing down so it is supporting throttle lever. Place a 3/32" (3 mm) drift pin on **96444** Pin and tap pin thru housing.
6. Remove **51946** Valve Stem Assembly.
7. Remove **96443** O-Ring from **51946** Valve Stem Assembly. **Housing Disassembly Complete.**

Assembly Instructions - 1 hp Die Grinders

Motor Assembly:

Important: Be sure parts are clean and in good repair before assembling. Follow grease, oil and torque specifications.

1. Place **51921** Rotor into a padded vise with male thread facing upwards.
2. Slip **51927** Rotor Spacer over rotor shaft and down against rotor body face.
3. Press **96441** Coiled Pin into **51922** Front Bearing Plate. Make certain, coiled pin does not protrude beyond internal bearing surface.
4. Place a .002" Shim into the base of **51922** Front Bearing Plate as an initial spacing and slide **54520** Bearing to the front plate base.
   Note: 51951 Shim Pack contains .001" and .002" Shims.
5. Slip bearing/bearing plate assembly onto rotor, torque **50011** Collet Body onto rotor shaft to 17 N•m (150 lb.-in.).
6. Check clearance between rotor and front bearing plate by using a .001" feeler gauge. Clearance should be between .001" - .0015". Adjust clearance by repeating steps 4 and 5 with different shims if necessary.
7. Once proper rotor gap clearance is achieved, install well lubricated **51926** Blades (4) into rotor slots. Dynabrade recommends lubricating blades with **95842** Air Lube.
   Important: Make certain beveled edge of blade follows rotor outside diameter.
8. Install **51925** Cylinder over rotor and front plate raised boss. Align coiled pin on front plate to cylinder slot.
9. Press **96441** Coiled Pin into blind hole on **51923** Rear Bearing Plate. Press (2) **96445** Coiled Pins into the back side of rear bearing plate.

(continued on next page)

Assembly Instructions - (Continued)

Important: Manufacturer's warranty is void if tool is disassembled before warranty expires.
Please refer to parts breakdown for part identification.

10. Peel backing off **51924** Gasket and align it firmly in place onto **51923** Rear Bearing Plate.
11. Place **51923** Rear Bearing Plate over rotor mandrel and insert raised boss on rear bearing plate into cylinder diameter, while inserting short coiled pin into cylinder slot. Be sure inlet slot on rear bearing plate line up with inlet slot on cylinder. Flip cylinder end to end and repeat step 8 for correct assembly.
12. Press **02057** Bearing onto rotor and into **51923** Rear Bearing Plate hole until it is seated.
    Important: While pressing **02057** Bearing, make certain to contact inner race of bearing. Cylinder must fit snug between bearing plates. If too tight, rotor will not turn freely. Rotor must be lightly tapped at press fit end until rotor spins freely while still maintaining a snug fit. A loose fit will not achieve the proper preload on motor bearings.
13. Add one drop of Loctite® 243 (or equiv.) to governor assembly male thread and screw governor assembly into place (**LEFT HAND** thread) with a slotted screw head. Torque to 2 N•m (18 lb.-in.).
14. Install motor assembly into housing, making sure motor drops all the way into housing. **Note:** Align both **96445** Coiled Pins to slots in insert and against **51924** Gasket.
15. Install **95438** O-Ring onto **53620** Adapter and slide adapter into housing and over **54520** Bearing.
16. Place **96498** Wave Washer onto **53620** Adapter.
17. Apply a small amount of Loctite® 567 to housing thread, and install **51947** Housing Cover using **50971** Pin Wrench (***ordered separately***) or an adjustable pin wrench. Torque cover to 35 N•m (310 lb.-in.).
18. Install collet insert and **50012** Collet Cap.

Motor Assembly Complete.

Housing Assembly:

1. Secure housing using **51989** Repair Collar (***see back cover for Optional Accessories***) with inlet facing upward.
2. Slide **96443** O-Ring onto **51946** Valve Stem and slide sub-assembly until o-ring passes through housing hole. Make certain valve stem assembly slides freely after the o-ring passes through the hole.
3. Install **51945** Valve Seat by aligning 3 male prongs with three deep slots on insert. Make certain valve seat is pressed flat against base of pocket. **Note:** Add a few drops of Dynabrade Air Lube (P/N **95842**) to pocket walls before inserting **51945** Valve Seat.
4. Install **51944** Tip Valve as shown.
5. Pre-assemble muffler, slide **53683** Spacer over **53681** Inlet Bushing and up against the hex head base. Slide **94924** Wave Spring over **53681** Inlet Bushing and up against spacer. Pre roll **94528** Felt and install it in **53686** Muffler Cap. Support felt in felt/muffler cap assembly and slide **53681** Inlet Bushing thru the inside until the muffler cap assembly seats against the **94924** Wave Spring. Flare the felt and place **51940** Spacer over male thread and set **96442** O-Ring into groove at the base of thread. Return felt to unflared form. Slide **51943** Spring into bushing and up to the two **51938** screens.
6. Place **53682** Gasket over felt silencer and against **53686** Muffler Cap.
7. Apply one drop of Loctite® #243 (or equiv.) to **53681** Inlet Bushing Thread.
8. Align small inside diameter of **51943** Spring to cone point on **51944** Tip Valve and thread inlet bushing and sub-assembly into place. Torque bushing to 35 N•m (310 lb.- in.).
9. Remove housing from **51989** Repair Collar and place repair collar onto the bench top with the part number identifier against the bench. Align the throttle lever holes to housing pinhole and rest the housing and throttle lever onto the legs of the repair collar. Press **96444** Coiled Pin into lever hole and center into housing.

Tool Assembly Complete. Please allow 30 minutes for adhesives to cure before operating tool.

Important: Before operating, place 2-3 drops of Dynabrade Air Lube (P/N **95842**) directly into inlet with throttle lever depressed. Operate tool for 30 seconds to allow air lube to properly lubricate internal motor components. Motor should now be tested for proper operation at 90 PSIG max. If tool operates at a higher RPM than marked on the tool or if vibration and sound levels seem abnormal, the tool should be serviced to correct the cause before use.

Loctite® is a registered trademark of Loctite Corp.

Preventative Maintenance Schedule

For All 1 hp Die Grinders

This service chart is published as a guide to expectant life of component parts. The replacement levels are based on average tool usage over one year. Dynabrade Inc. considers one year usage to be 1,000 hours or 50% of a man year. Parts included in motor tune-up kit are identified by High Wear and Medium Wear items.

LEGEND	
T	Part included in **96532** Tune-Up Kit
X	Type of wear, no other comments apply.
L	Easily lost. Care during assembly/disassembly.
D	Easily damaged during assembly/disassembly.
R1	Replace each time tool is disassembled.



96532 – 1 hp. Motor Tune-Up Kit

- Tune-Up Kit includes high wear and medium wear motor parts.

Parts Common to all Models:

Index #	Part Number	Description	Number Required	High Wear 100%	Medium Wear 70%	Low Wear 30%	Non-Wear 10%
1	**50012**	Collet Cap	1				**X**
2	**See Note**	Collet Insert	1			**X**	
3	**51947**	Housing Cover	1				**X**
4	**96498**	Wave Spring	1				**T, X**
5	**95438**	O-Ring	1		**T, L**		
6	**53620**	Motor Adapter	1				**X**
7	**50011**	Collet Body	1				**X**
8	**54520**	Bearing	1		**T, X**		
9	**51951**	Shim Pack	1		**T, L**		
10	**51922**	Front Bearing Plate	1			**X**	
11	**96441**	Pin (2)	2			**X**	
12	**51927**	Rotor Spacer	1		**T, X**		
13	**51921**	Rotor	1			**X**	
14	**51926**	Blade (4/pkg.)	4	**T, X**			
15	**51925**	Cylinder	1			**X**	
16	**51923**	Rear Bearing Plate	1			**X**	
17	**02057**	Bearing	1		**T, X**		
18	**96445**	Pin (2)	2			**X**	
19	**51924**	Gasket	1		**T, X**		
20	**See Note**	Governor Assembly	1				**X**
21	**See Note**	Housing	1				**X**
22	**96444**	Pin	1		**T, L**		
23	**51949**	Safety Lever Assembly	1			**X**	
24	**51946**	Valve Stem Assembly	1		**T, X**		
25	**51945**	Valve Seat	1				**X**
26	**51944**	Tip Valve	1		**T, X**		
27	**51943**	Spring	1				**X**
28	**96442**	O-Ring	1		**T, L**		
29	**51940**	Spacer	1				**X**
30	**53682**	Gasket	1		**X**		
31	**94528**	Felt Silencer	1		**T, X**		
32	**53686**	Muffler Cap	1				**X**
33	**94924**	Wave Spring	1				**X**
34	**53683**	Spacer	1				**X**
35	**53681**	Inlet Bushing	1				**X**

Note: Please refer to page 4 of tool manual for specific part number.

Optional Accessories



Dynaswivel®

- Swivels 360° AT TWO PIVOT POINTS allowing the air hose to drop directly to the floor while providing superb tool handling.

95461 – 3/8" NPT.

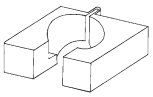

51989 Repair Collar

- Specially designed collar for use in vise to prevent damage to valve body of tool during disassembly/assembly.



Dynabrade Air Lube

- Formulated for pneumatic equipment.
- Absorbs up to 10% of its weight in water.
- Prevents rust and formation of sludge.
- Keeps pneumatic tools operating longer with greater power and less down time.

95842: 1pt. (473 ml)
95843: 1gal. (3.8 L)



50971 Lock Ring Tool

- Lock Ring Tool has a 3/8 in. square socket for use with 3/8 in. drive; breaker bar, ratchet head, or torque wrenches.



Bearing Press Tools

- Used to install bearings.

96243: For installing **02057** Bearing.
96244: For installing **01007** & **54520** Bearings.



96005 Male Plug

- Provides up to twice the air flow compared to standard plug design.
- Plug has "ported" design to prevent "starving" of the air tool.



95262 – 14mm open-end.
95281 – 19mm open-end.



96532 Motor Tune-Up Kit

- Includes assorted parts to help maintain and repair motor.

01908 Drop-In Motor

- Allows quick and easy replacement. No motor adjustments needed.



Carbide Burr Kits

- Includes 12 burrs for grinding, deburring and finishing metal.

93351 – 1/8" Kit
93350 – 1/4" Kit
93380 – 6mm Kit



Collet Inserts

- **50065** – 1/8"
- **50013** – 1/4"
- **50014** – 3/8"
- **50016** – 6mm
- **50039** – 8mm



- **50010** – 1/4" Collet Assembly.
- **50015** – 6mm Collet Assembly.



53621 Over Hose Assembly

- Over Hose Assembly directs exhaust away from operator.



30335 Air Supply Hose

- 3/8 in. I.D. x 60 in. Wide air supply hose, includes: 3/8 in. NPT male and female threaded fittings.

REFERENCE CONTACT INFORMATION

American National Standards Institute (ANSI) • www.ansi.org
25 West 43 Rd St., 4th Floor • New York, NY 10036 • Tel: 1 (202) 293-8020

Compressed Air & Gas Institute (CAGI) • www.cagi.org
1300 Sumner Ave. • Cleveland, OH 44115
Tel: 1 (216) 241-7333

European Committee for Standards (PNEUROP) • www.pneurop.org
rue de Drapiers 21 • 1050 Brussels, Belgium

International Organization for Standardization (ISO)
www.iso.org • PO Box 56 • Ch-1211 Geneve 20, Switzerland

U.S. Government Publishing Office (GPO) • www.gpo.gov
Superintendent of Documents
732 North Capitol Street NW • Washington, DC 20401
Tel: 1 (202) 512-1800

DYNABRADE, INC. **www.dynabrade.com**
8989 Sheridan Drive • Clarence, NY 14031-1419 • Phone: (716) 631-0100 • Fax: 716-631-2073 • International Fax: 716-631-2524
©DYNABRADE, INC., 2018

DYNABRADE®