For Serial No. 1L1986 and Higher

Parts Page Reorder No. PD01•103
Effective December, 2001
Supersedes PD00•68

3" Dynabuffer

Models:
57125 – 3" Dynabuffer

Air Motor and Machine Parts

⚠WARNING **Always operate, inspect and maintain this tool in accordance with the Safety Code for portable air tools (ANSI B186.1) and any other applicable safety codes and regulations. Please refer to Dynabrade's Warning/Safety Operating Instructions for more complete safety information.**

Index Key

No.	Part #	Description
1	**56145**	Pad
2	**54459**	Shroud
3	**95630**	Snap Ring
4	**57069**	Balancer Shaft
5	**95628**	Bearing Shield
6	**56053**	Felt Seal
7	**56052**	Bearing
8	**57422**	Shaft Balancer
9	**56047**	Rotor Key
10	**57088**	Bearing
11	**56046**	Lock Ring
12	**50659**	O-Ring
13	**57057**	Front Bearing Plate
14	**57113**	Rotor/Blade Set
15	**51354**	Cylinder
16	**95971**	Pin
17	**57056**	Rear Bearing Plate
18	**01206**	Bearing
19	**95626**	Retaining Ring
20	**54183**	Housing
21	**54192**	Spring
22	**95523**	O-Ring (2)
23	**56076**	Valve Plug
24	**51358**	Grip
25	**97165**	Hang Plate
26	**01017**	Pin
27	**95020**	Set Screw
28	**01020**	O-Ring
29	**56029**	Valve Stem
30	**54187**	Throttle Lever
31	**54188**	Handle Grip
32	**54689**	Adapter (Non-Vac)
33	**56091**	Nozzle
34	**54193**	Gasket
35	**57423**	Adapter
36	**01494**	Inlet Bushing
37	**54199**	Muffler Seat
38	**54195**	Muffler (3)
39	**54194**	Muffler Cap
40	**01791**	Split Lock Washer (2)
41	**95720**	Screw (2)

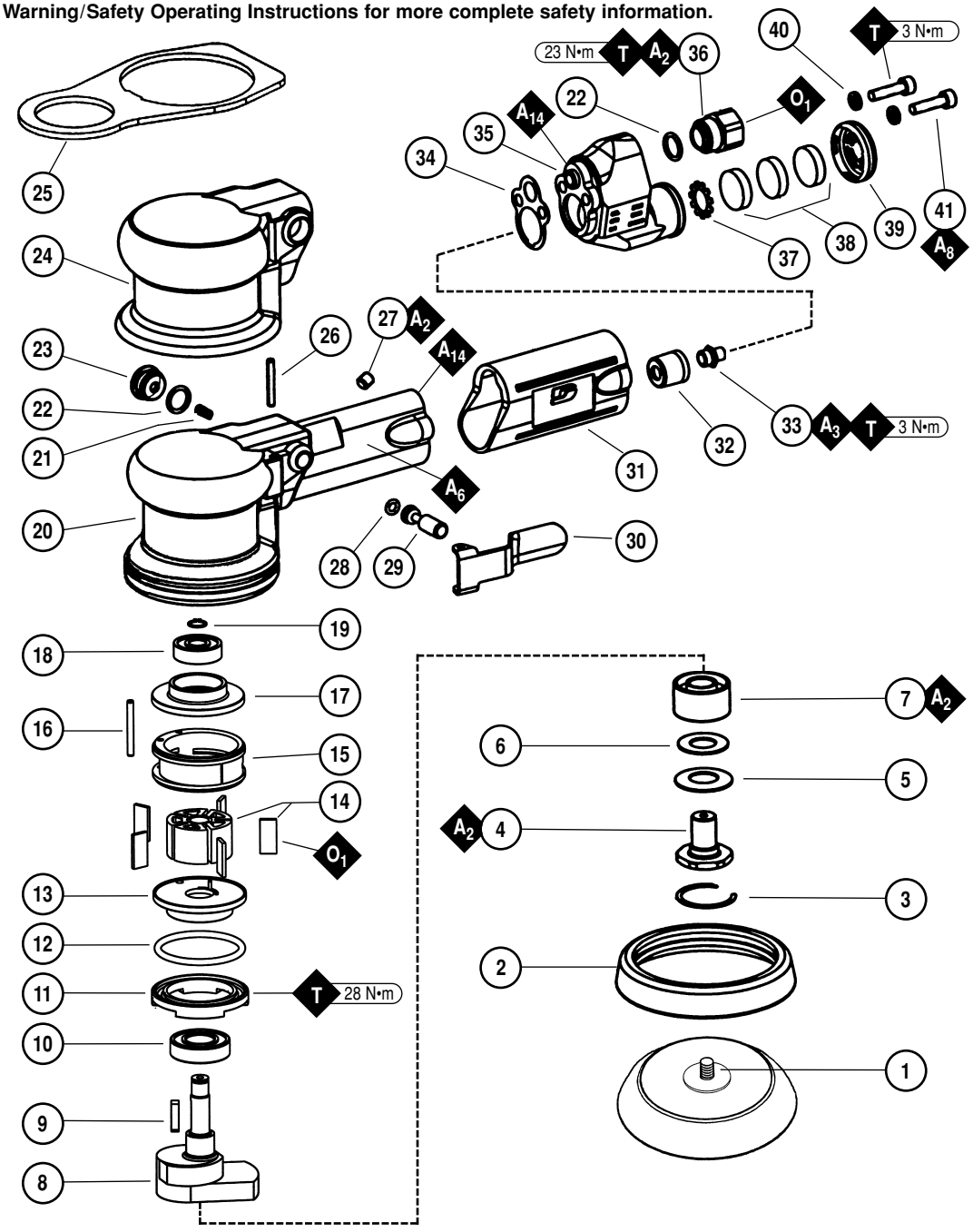

KEY

- **O** Oil: **O_1 = Air Lube**
- **A** Adhesive: **A_2 = Loctite #271**, **A_3 = Loctite #242**, **A_6 = Loctite #380**, **A_8 = Loctite #567**, **A_{14} = Loctite #518**
- **T** Torque: **N•m x 8.85 = In. - lbs.**

See inside for Important Operating, Maintenance and Safety Instructions.

Important Operating, Maintenance and Safety Instructions

Carefully read all instructions before operating or servicing any Dynabrade® Abrasive Power Tool.
Warning: Hand, wrist and arm injury may result from repetitive work motion and overexposure to vibration.
Important: All Dynabrade Rotary Vane air tools must be used with a Filter-Regulator-Lubricator to maintain all warranties.

Operating Instructions:

Warning: Eye, face, sound, respiratory, and body protection must be worn while operating power tools. Failure to do so may result in serious injury or death. Follow safety procedures posted in workplace.

Caution: This tool is not to be run at free speed for any length of time The tool is specifically designed to be low in vibration under load. Running the tool at free speed may cause the buffing pad to become dislodged from the back-up pad.

1. All initial set-up and maintenance to the tool should be done with the air line disconnected from the tool.
2. Install air fitting into inlet bushing of tool. The inlet bushing is a 1/4" NPT, for optimal performance of the tool, directly couple the air line to the tool or use a quick couple fitting with a large inlet hole such as Dynabrade's P/N **95675**. **Important:** Secure inlet bushing of tool with a wrench before attempting to install the air fitting to avoid damaging valve body housing.
3. While there may be other applications suited for this tool it has been specifically designed for the automotive market to be used as the second step of a special two step operation to remove paint imperfections in the clear coat of automotive finishes. The correct back-up pad and buffing pad are required to correctly operate the tool. Attach a back-up pad to the tool that is compatible with the paint system.
4. A waffle pad such as 3M P/N **02648** is required to be attached to the back-up pad, other pads may be available contact a Dynabrade or 3M representative for additional information. Pre-condition a virgin pad thoroughly with 3M Final Finish Finesse-It Compound 3M P/N **82876** before attaching it to the tool. Once the pad has been conditioned this process need not be done until a new waffle pad is required either due to wear or the compound has been allowed to set up rendering the pad useless.
5. Apply a small (15 mm) dab of Final Finish on the repaired area, and position tool on the repair surface. Apply approximately a 3 pound load on the pad before throttling the tool on. Adjust the force on the pad as required to feel the "sweet spot" (low vibration). Buffing for approximately 5 seconds with the pad flat on the work surface should remove the sand scratches of the initial process. Release the throttle lever and then remove the tool from the work piece.

Maintenance Instructions:

1. Through use of tool the mufflers may clog, hamper performance and require replacement.
2. Check tool speed regularly with a tachometer. A Magnetic Tachometer such as Dynabrade P/N **96368** is the simplest way to perform this operation. There are two test conditions to assure that the tool is running properly, these conditions being free speed and under load. The free speed is a simple check to quickly determine if the tool is out of specification. Checking under load requires additional test equipment but assures the proper operation of the tool. All speed testing must be done with 80 psig of air at the inlet bushing, a Pressure Gage such as Dynabrade P/N **94315** is required. The tool should run between 9,000 RPM and 11,000 RPM free speed with 80 psig at the tool inlet bushing. If the tool is running outside these speeds it should be serviced to correct the cause before use. The under load condition can be checked by outfitting the tool with the proper back-up pad, waffle pad and buffing cream as outlined in the operating instructions. Apparatus is also required to monitor the load applied to the work surface. Dynabrade offers a Load Cell P/N **80025** that allows the tool to be tested on a bench. First zero out the scale by adjusting the knob on the side of the load cell to read zero when the tool, back-up pad, and waffle are resting on the wear plate of the load cell while connected to the air line. Apply a 3 pound load to the load cell and using the digital tachometer check he operating speed of the tool. The tool should be running 5,500 RPM minimum. If the tool is running outside this range it should be serviced to correct the cause before use.
3. All Dynabrade Rotary Vane air motors should be lubricated. Dynabrade recommends using Dynabrade Air Lube (P/N **95842**: 1pt. 473ml.) at a rate of 1 drop per minute. If Dynabrade Air Lube is not compatible with paint system it may be substituted with a compatible air tool lubricant with water absorbing properties to prevent internal components from rusting.
4. An Air Line Filter-Regulator must be used with this air tool to maintain all warranties. Dynabrade recommends the following: **11405** Air Line Filter-Regulator-Lubricator — Provides accurate air pressure regulation, two-stage filtration of water contaminants and micro-mist lubrication of pneumatic components. Operates 40 SCFM @ 100 PSI has 3/8" NPT female ports.
5. Use only genuine Dynabrade replacement parts. To reorder replacement parts,please specify the Model #, Serial # and RPM of your machine.
6. A Motor Tune-Up Kit (P/N **96437**) is available which includes assorted parts to help maintain motor in peak operating condition.
7. Mineral spirits are recommended when cleaning the tool and parts. Do not clean tool or parts with any solvents or oils containing acids, esters, keytones, chlorinated hydro carbons or nitro carbons.

Safety Instructions:

Products offered by Dynabrade should not be converted or otherwise altered from original design without expressed written consent from Dynabrade, Inc.



- **Important:** User of tool is responsible for following accepted safety codes such as those published by the American National Standards Institute (ANSI).
- Tool should not be running for extended periods of time free speed as it is not balanced for this condition. Avoid running the tool at free speed with a buffing pad installed onto the back-up pad as it may dislodge from the tool.
- Always disconnect the air line before changing the back-up pad or making machine adjustments.
- Inspect abrasives/accessories for damage or defects prior to installation on tools.
- Please refer to Dynabrade's Warning/Safety Operating Instructions Tag (Reorder No. **95903**) for more complete safety information.
- **Warning:** Hand, wrist and arm injury may result from repetitive work, motion and overexposure to vibration.

Notice

All Dynabrade motors use the highest quality parts and metals available and are machined to exacting tolerances. The failure of quality pneumatic motors can most often be traced to an unclean air supply or the lack of lubrication. Air pressure easily forces dirt or water contained in the air supply into motor bearings causing early failure. It often scores the cylinder walls and the rotor blades resulting in limited efficiency and power. Our warranty obligation is contingent upon proper use of our tools and cannot apply to equipment which has been subjected to misuse such as unclean air, wet air or a lack of lubrication during the use of this tool.

One Year Warranty

Following the reasonable assumption that any inherent defect which might prevail in a product will become apparent to the user within one year from the date of purchase, all equipment of our manufacture is warranted against defects in workmanship and materials under normal use and service. We shall repair or replace at our factory, any equipment or part thereof which shall, within one year after delivery to the original purchaser, indicate upon our examination to have been defective. Our obligation is contingent upon proper use of Dynabrade tools in accordance with factory recommendations, instructions and safety practices. It shall not apply to equipment which has been subject to misuse, negligence, accident or tampering in any way so as to affect its normal performance. Normally wearable parts such as bearings, contact wheels, rotor blades, etc., are not covered under this warranty.

Motor Assembly/Disassembly Instructions – 3" Dynabuffer

Important: Manufacturers warranty is void if tool is disassembled before warranty expires.
A complete repair kit, part number **96405**, is available which includes special tools for correct disassembly/assembly of tool.

To Disassemble

1. Disconnect tool from power source.
2. Invert machine and secure in vice, using **57092** Collar (supplied in **96405** Repair Kit) or padded jaws.
3. Remove sanding pad with 26 mm open-end wrench (supplied with sander) and shroud or overskirt.
4. Insert **56058** Lock Ring Tool (supplied in **96405** Repair Kit) into corresponding tabs of lock ring and unscrew. Motor may now be lifted out for service.
5. Remove **95626** Snap Ring.
6. Remove the rear plate and the cylinder assembly by securing the cylinder in a bearing separator gripped on the cylinder exhaust and extra pocket area. Push the motor shaft balancer through the bearing.
7. Remove the rotor, vanes and rotor key from the motor shaft balancer. Remove the front plate using a small (#2) arbor press. Support the edges of the front plate while pressing on the small end of the motor shaft balancer.
8. **a.)** If, during step 7, the front plate and **57088** Bearing remain together, press **57088** Bearing out of the front plate using **57091** Press Tool (supplied in **96405** Repair Kit) as shown in **Drawing 1**.
   b.) If, during step 7, the front plate and **57088** Bearing remains on the motor shaft balancer, it can be removed with a bearing separator.
9. Remove **01206** Bearing from the rear plate by using a bearing press tool.
10. Disassemble the balancer assembly as follows:
    a.) Place motor shaft assembly into a soft jaw vise. Using a thin screwdriver, pick out the end of **95630** Snap Ring and peel out. This will loosen the balancer assembly.
    b.) Screw the female threaded portion of the **56056** Bearing Puller (supplied in **96405** Repair Kit) onto the **96416** Set Screw of the balancer shaft and heat the outside of the motor shaft balancer to approximately 200° F (approximately 10 seconds with a propane torch). Now, using the slider weight, pull the assembly out.
    c.) Press off **56052** Bearing with a bearing separator and remove bearing seal and bearing shield.
11. If during step 10, the **56052** Bearing remains in the motor shaft balancer, it can be removed by the heating the shaft balancer again and using either an inside bearing puller or a blind hole bearing puller.

Drawing 1

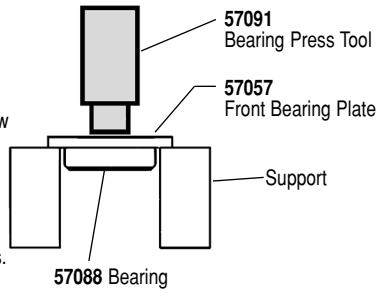

Drawing 2

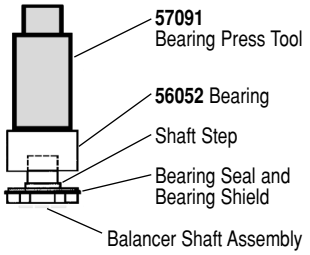

To Assemble:

Important: Be certain parts are clean and in good repair before assembling.

1. Assemble the balancer assembly as follows:
   a.) Install **95630** Snap Ring onto balancer shaft. Install **95628** Shield with convex face toward hex of balancer shaft.
   b.) Install **56053** Seal. **Note:** Be certain seal is pressed completely over shaft step.
   c.) Apply 1 drop of #271 Loctite® (or equivalent) and spread over several places around the inside diameter of the **56052** Bearing and the outside diameter of the **57069** Balancer Shaft.
   d.) Press fit **56052** Bearing with seal side toward hex of balancer shaft up to shaft step as shown in **Drawing 2**. This must be a firm press fit for proper retention of bearing.
2. Place the motor shaft balancer in a soft jaw vise with large end-up.
3. Apply 1 drop of #271 Loctite® (or equivalent) and spread over several places around the outside diameter of the **56052** Bearing and slide balancer assembly into the motor shaft balancer until **56052** Bearing is firmly seated at bottom. Squeeze **95630** Snap Ring into groove in motor shaft balancer to complete the assembly. Remove from vise.
4. Press **57088** Bearing onto the motor shaft balancer down to the shoulder as shown in **Drawing 3**.
5. Press **57057** Front Bearing Plate onto **57088** Bearing as shown in **Drawing 4** and check for smooth rotation.
6. Place the **57090** Rotor and **56047** Rotor Key on the motor shaft balancer. Place the **56073** Vanes into the rotor slots. **Note:** Vanes should be lightly lubricated with Dynabrade Air Lube P/N **95842** (or equivalent) before installation.
7. Place **51354** Cylinder with **95571** Pin over rotor. The "short" line-up pin goes toward the front plate.
8. Place **57056** Rear Bearing Plate (with **01206** Rear Bearing pressed into place) over shaft and "long" end of line-up pin and press fit in place as shown in **Drawing 5**.
9. Place **95626** Snap Ring in groove.
10. Secure motor housing in vise, using **57092** Collar or padded jaws. Spread 2-3 drops of pneumatic tool oil around the housing bore for ease of insertion of motor assembly. Slide motor assembly into secured housing. **Note**: Be certain line-up pin enters the hole in the bottom of the housing.
11. Install **50659** O-Ring into **56046** Lock Ring.
12. Tighten lock ring with **56046** Lock Ring Tool to 34 N•m/300 in. - lbs. Attach shroud and buffing back-up pad.

Drawing 3

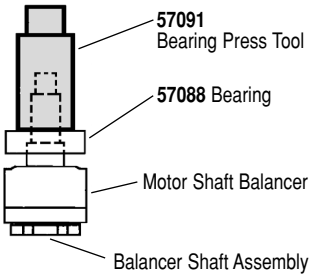

Drawing 4

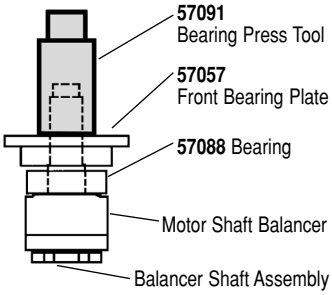

Tool Assembly Complete. Please allow 30 minutes for adhesives to cure before operating tool.

Valve and Speed Regulator Assemblies:

1. Secure housing in vice using **57092** Collar or padded jaws.
2. Remove **56076** Valve Plug. Remove the **95523** O-Ring.
3. Remove **54192** Spring, and **56029** Valve Stem with o-ring.
4. Install new **95523** O-Ring onto **56076** Valve Plug, and new **01020** O-Ring onto **56029** Valve Stem.
5. Place valve stem into housing, alone with **54192** Spring.
6. Install **56076** Valve Plug and new **95523** O-Ring.

Drawing 5

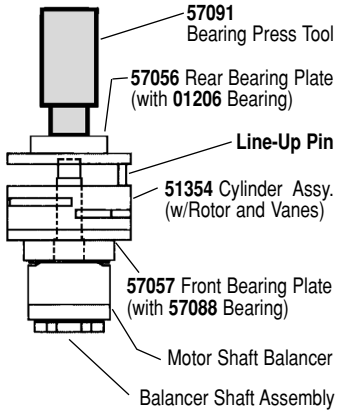

(continued on next page)

Motor Assembly/Disassembly Instructions – 3" Dynabuffer (continued)

7. Spread 1 drop of #271 Loctite® (or equivalent) around the threads of the inlet bushing and tighten into housing to 28 N•m/250 in. - lbs.

Note: Motor should operate at between 9,000 and 11,000 RPM free speed with 80 PSIG of air at the inlet of the tool. RPM should be checked with a tachometer. Before operating, we recommend that 2-3 drops of Dynabrade Air Lube P/N **95842** (or equivalent) be placed directly into the air inlet with throttle lever depressed. Operate the machine for approximately 30 seconds before application to workpiece to determine if machine is working properly and safely and to allow lubricating oils to properly dispense through machine.

Loctite®is a registered trademark of the Loctite Corp.

Disc Pad Change:

1. Insert **50679** Wrench on flats of **57069** Balancer Shaft and twist off sanding pad by hand.
2. With wrench still in place, hand tighten new pad on tool.
3. No need to remove shroud or overskirt.

Machine Specifications

Model Number	Motor HP (W)	Motor RPM	Sound Level	Pad Dimensions Inch (mm)	Orbit Diameter Inch (mm)	Maximum Air Flow CFM/SCFM (LPM)	Spindle Thread	Weight Pound (kg)	Length Inch (mm)	Height Inch (mm)
57125	.16 (119)	10,000	79 dB(A)	3 (76)	.6 (14)	2/16 (453)	5/16"-24 female	2.6 (1.2)	9-1/4 (235)	3-5/8 (92)

Additional Specifications: Air Inlet Thread 1/4" NPT • Hose I.D. Size 3/8" (10 mm) • Air Pressure 90 PSIG (6.2 Bars)

Optional Accessories

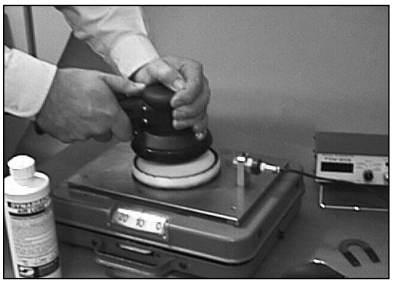

80030 Training and Maintenance Test Equipment Kit:
- **80025** Load Cell measures tool RPM under load and useful for training operators for proper buffing pressure/operation. Electronic tachometer pick-up securely fastens to wear plate.
- **94315** Pressure Gage to ensure peak operating performance.
- **95842** Air Lube formulated for pneumatic tools. Prevents rust and formation of gum/sludge for longer tool operation with greater power and less downtime.
- **96368** Tachometer used to measure tool RPM.



Filter-Regulator-Lubricator
11405: 40 SCFM @ 100 PSI, 3/8" NPT female ports.
- Provides accurate air pressure regulation, two stage filtration of water/contaminants and lubrication of pneumatic components.



96437 Motor Tune-Up Kit:
- Includes assorted parts to help maintain and repair motor.

96405 Motor Repair Kit: (not pictured)
- Contains special tools for Disassembly/Assembly of machine.



96392 Tune-Up Video

Visit Our Web Site: www.dynabrade.com

Email: Customer.Service@Dynabrade.com

DYNABRADE®

DYNABRADE, INC., 8989 Sheridan Drive • Clarence, NY 14031-1490 • Phone: (716) 631-0100 • Fax: 716-631-2073 • International Fax: 716-631-2524
DYNABRADE EUROPE S.àr.l., Zone Artisanale • L-5485 Wormeldange—Haut, Luxembourg • Telephone: 352 76 84 94 1 • Fax: 352 76 84 95 1

©DYNABRADE, INC., 2001

PRINTED IN USA