Parts Page Reorder No. PD01•10
Effective February, 2001
Supercedes PD92•12

Dynisher

Models:

50730 – Standard Duty
50760 – Versatility Kit

Machine and Motor Parts.

⚠ WARNING **Always operate, inspect and maintain this tool in accordance with the Safety Code for portable air tools (ANSI B186.1) and any other applicable safety codes and regulations. Please refer to Dynabrade's Warning/Safety Operating Instructions for more complete safety information.**

Index Key

No.	Part #	Description
1	**95179**	Bolt
2	**95023**	Bolt
3	**95167**	Washer (3)
4	**95166**	Washer (2)
5	**50733**	Handle Bracket
6	**50734**	U Handle Bracket
7	**50753**	Handle Grip Assembly (Incl. **50752** Rod, **95169** Grip)
8	**95158**	Bolt
9	**50749**	Wheel Guard
10	**95227**	Washer (3)
11	**95207**	Screw (2)
12	**50745**	Handle Locking Nut
13	**95594**	Spring
14	**95405**	Screw
15	**95146**	Washer (2)
16	**95407**	O-Ring
17	**95309**	Screw (2)
18	**50748**	Silencer
19	**95168**	Screw (4)
20	**50744**	Handle Mounting Stud
21	**50732**	Cover
22	**95350**	Drive Belt
23	**95178**	Screw
24	**50740**	Driven Pulley
25	**95364**	Washer
26	**95210**	Screw (5)
27	**50743**	Bearing Plate
28	**50741**	Spacer
29	**50722**	Bearing (2)
30	**95446**	Washer (2)
31	**11813**	Bearing (2)
32	**95447**	Washer (2)
33	**50762**	Driven Gear
34	**50761**	Drive Gear
35	**50766**	Nut
36	**11013**	Bearing
37	**50759**	Tension Arm
38	**50747**	Tension Spring
39	**95515**	Screw (4)
40	**50731**	Housing
41	**95365**	Woodruff Key (2)
42	**50736**	Wheel Arbor
43	**50716**	Washer
44	**50737**	Arbor Locking Screw
45	**95406**	View Port Screw
46	**95097**	Grease Fitting
47	**50751**	Spring Mount
48	**95163**	Screw
49	**95368**	Woodruff Key
50	**50763**	Drive Gear Shaft
51	**07101**	Air Motor
52	**95746**	Air Regulator
53	**50719**	Wheel Wrench
54	**50679**	Wrench

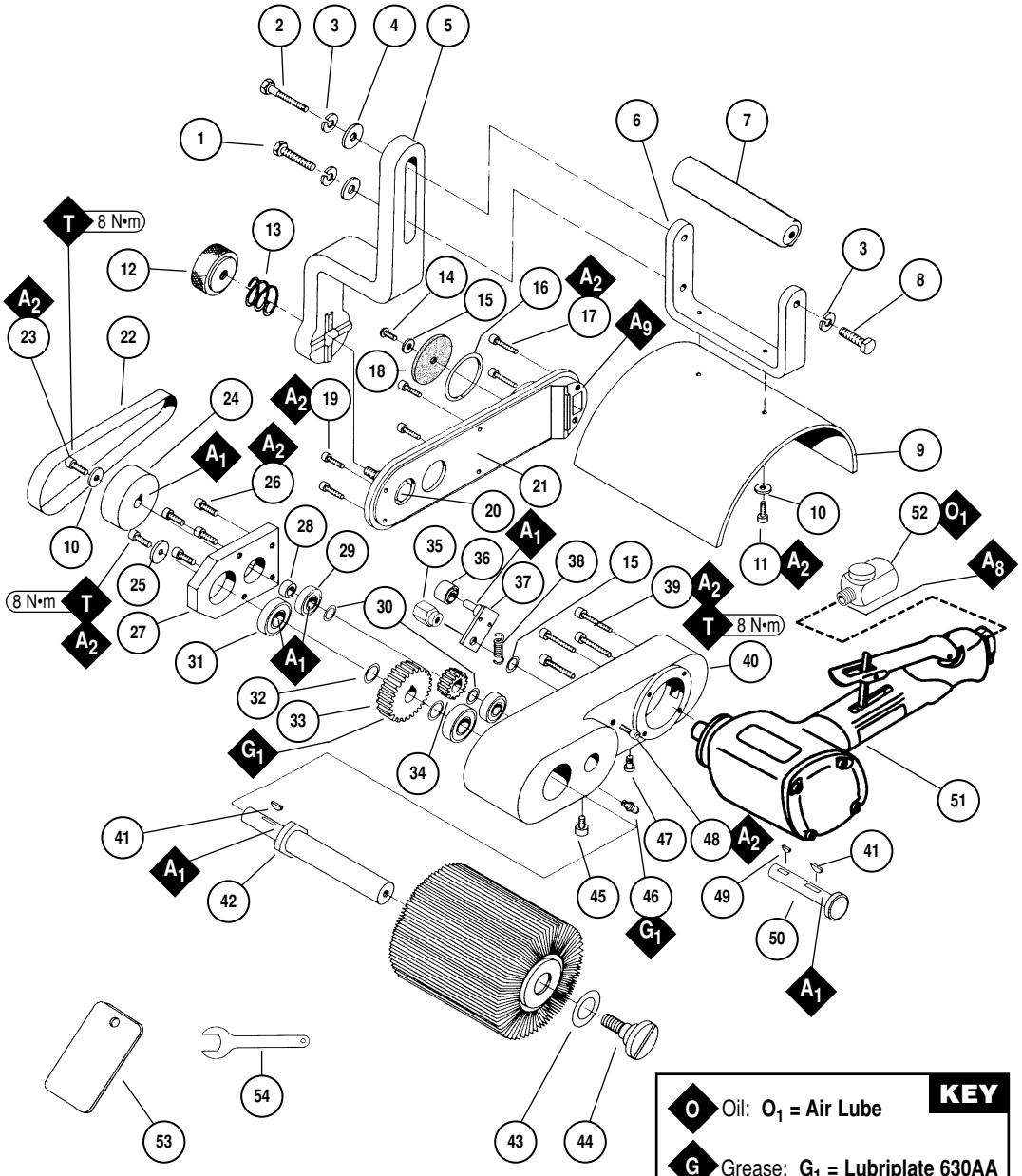

KEY

- **O** Oil: **O_1 = Air Lube**
- **G** Grease: **G_1 = Lubriplate 630AA**
- **A** Adhesive: **A_1 = Loctite #609**, **A_2 = Loctite #271**, **A_6 = Loctite #380**, **A_8 = Loctite #567**, **A_9 = Loctite #587**
- **T** Torque: **N•m x 8.85 = In. - lbs.**

See reverse side for Air Motor Assembly.

07101 Air Motor

Index Key		
No.	**Part #**	**Description**
1	**50757**	Drive Pulley
2	**95584**	O-Ring
3	**01687**	Air Deflector
4	**07153**	Air Control Ring
5	**01036**	Bearing
6	**01277**	Shim Pack (3/Pkg.)
7	**07119**	Bearing Plate
8	**07107**	Blade (5/Pkg.)
9	**07103**	Rotor
10	**07114**	Bearing Plate
11	**01007**	Bearing
12	**01673**	Guide Pin
13	**07118**	Cylinder
14	**01775**	Guide Pin
15	**95407**	O-Ring
16	**07131**	Housing
17	**07129**	Gasket
18	**07122**	Housing Cap
19	**01791**	Washer (4)
20	**01790**	Screw (4)
21	**07136**	Handle Grip
22	**02658**	Packing
23	**02631**	Nut
24	**02626**	Adjustment Bushing
25	**01746**	O-Ring
26	**07141**	Valve Body (Incl. **07142** Bushing)
27	**07168**	Valve Stem Assembly
28	**07145**	Spring
29	**07146**	Packing
30	**07147**	Plug
31	**01089**	Lever
32	**07142**	Bushing
33	**01017**	Pin
34	**01660**	Inlet Bushing

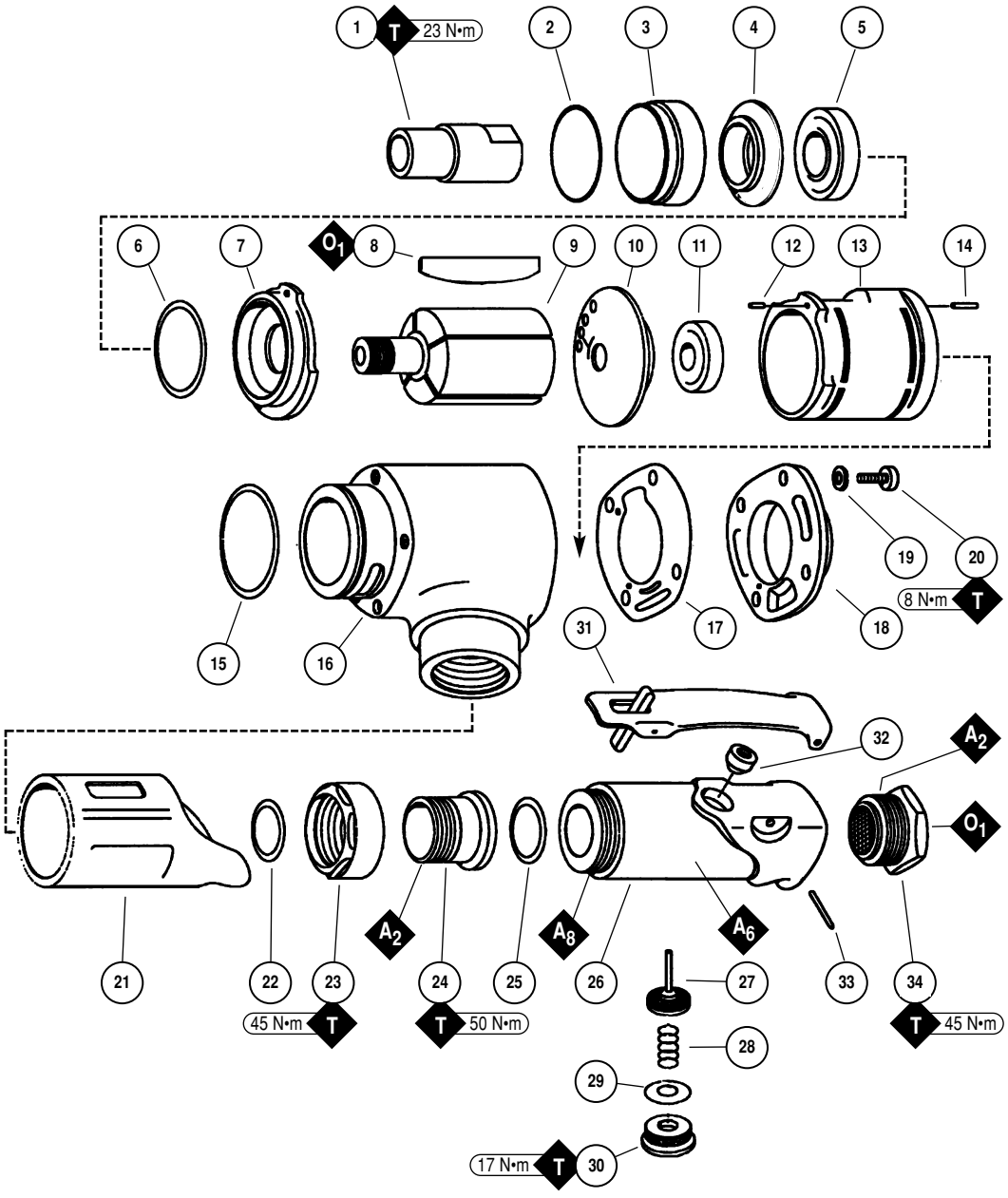

KEY	
O	Oil: **O_1 = Air Lube**
A	Adhesive: **A_2 = Loctite #271** **A_6 = Loctite #380** **A_8 = Loctite #567**
T	Torque: **N•m x 8.85 = In. - lbs.**

Important Operating, Maintenance and Safety Instructions

Carefully read all instructions before operating or servicing any Dynabrade® Abrasive Power Tool.
Warning: Hand, wrist and arm injury may result from repetitive work motion and overexposure to vibration.
Important: All Dynabrade Rotary Vane air tools must be used with a Filter-Regulator-Lubricator to maintain all warranties.

Operating Instructions:

Warning: Eye, face, respiratory, sound and body protection must be worn while operating power tools. Failure to do so may result in serious injury or death. Follow safety procedures posted in workplace.

1. With power source disconnected from tool, securely fasten abrasive/accessory on tool.
2. Install air fitting into inlet bushing of tool. **Important:** Secure inlet bushing of tool with a wrench before attempting to install the air fitting to avoid damaging valve body housing.
3. Connect power source to tool. Be careful **not** to depress throttle lever in the process.
4. Check tool speed with tachometer. If tool is operating at a higher speed than the RPM marked on the tool or operating improperly, the tool should be serviced to correct the cause before use.

Maintenance Instructions:

1. Check tool speed regularly with a tachometer. If tool is operating at a higher speed than the RPM marked on the tool, the tool should be serviced to correct the cause before use.
2. Some silencers on air tools may clog with use. Clean and replace as required.
3. All Dynabrade Rotary Vane air motors should be lubricated. Dynabrade recommends one drop of air lube per minute for each 10 SCFM (example: if the tool specifications state 40 SCFM, set the drip rate of your filter-lubricator at 4 drops per minute). Dynabrade Air Lube (P/N **95842**: 1pt. 473ml.) is recommended.
4. An Air Line Filter-Regulator-Lubricator must be used with this air tool to maintain all warranties. Dynabrade recommends the following: **11411** Air Line Filter-Regulator-Lubricator — Provides accurate air pressure regulation, two-stage filtration of water contaminants and micro-mist lubrication of pneumatic components. Operates 55 SCFM @ 100 PSIG has 1/2" NPT female ports.
5. Thoroughly wipe clean **95097** Grease Fitting and **95406** View Port Screw to prevent dirt and abrasive material from entering gear case. Remove the **95406** View Port Screw and supply two full plunges every 300 hours using **95542** Grease and **95541** Grease gun. **Note: Do not over grease!** Connect tool to the air supply and run the tool to allow excess grease to be relieved through the view port screw hole opening. Install **95406** View port Screw.
6. Use only genuine Dynabrade replacement parts. To reorder replacement parts,please specify the **Model #**, **Serial #** and **RPM** of your machine.
7. A Motor Tune-Up Kit (P/N **96011**) is available which includes assorted parts to help maintain motor in peek operating condition.
8. Mineral spirits are recommended when cleaning the tool and parts. Do not clean tool or parts with any solvents or oils containing acids, esters, keytones, chlorinated hydrocarbons or nitro carbons.

Safety Instructions:

Products offered by Dynabrade should not be converted or otherwise altered from original design without expressed written consent from Dynabrade, Inc.



- **Important:** User of tool is responsible for following accepted safety codes such as those published by the American National Standards Institute (ANSI).
- Operate machine for one minute before application to workpiece to determine if machine is working properly and safely before work begins.
- Always disconnect power supply before changing abrasive/accessory or making machine adjustments.
- Inspect abrasives/accessories for damage or defects prior to installation on tools.
- Please refer to Dynabrade's Warning/Safety Operating Instructions Tag (Reorder No. **95903**) for more complete safety information.
- **Warning:** Hand, wrist and arm injury may result from repetitive work, motion and overexposure to vibration.

Notice

All Dynabrade motors use the highest quality parts and metals available and are machined to exacting tolerances. The failure of quality pneumatic motors can most often be traced to an unclean air supply or the lack of lubrication. Air pressure easily forces dirt or water contained in the air supply into motor bearings causing early failure. It often scores the cylinder walls and the rotor blades resulting in limited efficiency and power. Our warranty obligation is contingent upon proper use of our tools and cannot apply to equipment which has been subjected to misuse such as unclean air, wet air or a lack of lubrication during the use of this tool.

One Year Warranty

Following the reasonable assumption that any inherent defect which might prevail in a product will become apparent to the user within one year from the date of purchase, all equipment of our manufacture is warranted against defects in workmanship and materials under normal use and service. We shall repair or replace at our factory, any equipment or part thereof which shall, within one year after delivery to the original purchaser, indicate upon our examination to have been defective. Our obligation is contingent upon proper use of Dynabrade tools in accordance with factory recommendations, instructions and safety practices. It shall not apply to equipment which has been subject to misuse, negligence, accident or tampering in any way so as to affect its normal performance. Normally wearable parts such as bearings, contact wheels, rotor blades, etc., are not covered under this warranty.

Machine Number	Length Inch (mm)	Height Inch (mm)	Weight Pound (kg)	Wheel Arbor (Dia. x Length)	Air Flow Rate SCFM (LPM)	Sound Level	Motor HP (W)	Max. SFPM RPM	Air Pressure PSIG (Bars)
50730	18" (457)	8-1/2" (216)	10.5 lbs. (4.8)	3/4" (19) x 4" (102)	58 (1,643)	93 dBA	1.02 (761)	3,930 (1,197)	90 (6.2)

Additional Specifications: Height 10-3/4" (273 mm) • Air Inlet Thread 3/8" NPT • Hose I.D. Size 1/2" (15 mm)

Accessories

Abrasive Impregnated Non-Woven Nylon Wheels
6" Dia. x 4" Wide; 3/4" Center Hole. Unit = 1 Wheel

Part No.	Type	Grade	Comments
90670	Metal-Finishing	Coarse	General metals finishing.
90864	Multi-Finishing	Medium	Final stainless finishing.

Coated Abrasive Aluminum Oxide Flap Wheels
4" Dia. x 4" Wide; 3/4" Center Hole. Unit = 10 Wheel

Part No.	Grit	Part No.	Grit	Part No.	Grit
90850	40	90851	80	90852	120

Cotton Polishing Wheels
4" Dia. x 1/2" Wide; 3/4" Center Hole

Part No.	Quantity Per Pkg.
90024	1
90025	8

Note: Eight wheels mount to Dynisher with two 95408 Spacers. Order spacers separately.

Wool Buffing Belts

Part No.	Belt Size	Qty. / Unit
90003	3" x 10-11/16"	2
90004	2-3/4" x 15-1/2"	2
90005	3-1/2" x 15-1/2"	2

Lubricating Procedure

1. Thoroughly wipe clean **95097** Grease Fitting and **95406** View Port Screw to prevent dirt and abrasive material from entering gear case.
2. Remove view port screw and supply two full plunges every 300 hours using **95542** Grease and **95541** Grease Gun. **Note: Do not over grease.**
3. Connect tool to the air supply and run the tool to allow excess grease to be relieved through the view port screw hole opening.
4. Install **95406** View Port Screw.

Dynacushion Pneumatic Wheels. Unit = 10 Wheels

Part No.	Arbor Hole	Rubber Wheel Only	Belt Size (Wide x Long)	Max. RPM
94473	3/4" Bore	94481	3-1/2" x 15-1/2"	3,500

94478 Pneumatic Wheel Kit
- 94473 Dynacushion.
- 50750 Mounting Spacers (2).
- 90273 Aluminum Oxide Belt (80-grit).
- 90283 Non-Woven Nylon Belt (coarse).

A Must with the Dynacushion!

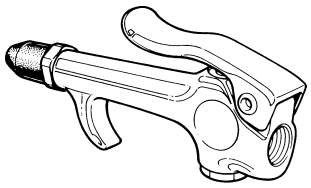

94465 Wheel Inflation Tool
- Controlled inflation / deflation of pneumatic wheel.
- Has 1/4" female thread; fits 1/4" air hose.

Dynacushion Belts
3-1/2" Wide x 15-1/2" Long. Unit = 50 Belts
Non-Woven Nylon Abrasive Impregnated Belts

Part No.	Grade/Grit Range	Part No.	Grade/Grit Range
90014	Super Fine/320-600	90282	Medium/150-180
90281	Very Fine/220-320	90283	Coarse/80-150

Coated Abrasive Aluminum Oxide Belts

Part No.	Grit	Part No.	Grit
90271	36	90274	100
90272	60	90275	120
90273	80	90277	180

Ceramic Coated Aluminum Oxide Belt

Part Number	Grit
90271	36

IMPORTANT: ALL DYNABRADE AIR TOOLS MUST BE USED WITH A FILTER-REGULATOR-LUBRICATOR TO MAINTAIN ALL WARRANTIES



Dynabrade Air Lube
- Formulated for pneumatic equipment.
- Absorbs up to 10% of its weight in water.
- Prevents rust and formation of sludge.
- Keeps pneumatic tools operating longer with greater power and less down time.

95842: 1pt. (473 m)
95843: 1gal. (3.8L)



95542 Grease 10 oz.
- Multi-purpose grease for all types of bearings, cams, gears.
- High film strength; excellent resistance to water, steam, etc.
- Workable range 0˚ F to 300˚ F.

95541 Push-type Grease Gun
- One-hand operation.

Visit our new Web Site: www.dynabrade.com

Email: Customer.Service@Dynabrade.com

DYNABRADE®

DYNABRADE, INC., 8989 Sheridan Drive • Clarence, NY 14031-1490 • Phone: (716) 631-0100 • Fax: 716-631-2073 • International Fax: 716-631-2524
DYNABRADE EUROPE S.àr.l., Zone Artisanale • L-5485 Wormeldange—Haut, Luxembourg • Telephone: 352 76 84 94 1 • Fax: 352 76 84 95 1

©DYNABRADE, INC., 2001

PRINTED IN USA