For Serial No. 0B1000 and Higher

Parts Page Reorder No. PD00•15
Effective February, 2000
Supercedes PD97•17

Models:
50727 – 12,000 RPM
50728 – 15,000 RPM
50729 – 20,000 RPM

.4 Hp/Right-Angle/Rear Exhaust 2" Depressed Center Wheel Grinder

Air Motor and Machine Parts

⚠WARNING **Always operate, inspect and maintain this tool in accordance with the Safety Code for portable air tools (ANSI B186.1) and any other applicable safety codes and regulations. Please refer to Dynabrade's Warning/Safety Operating Instructions for more complete safety information.**

Index Key

No.	Part	Description
1	**50041**	Guard Assembly
1A	**50081**	Wheel Flange
2	**50083**	Spacer
3	**02028**	Spindle
4	**02035**	Lock Nut
5	**01486**	Felt Silencer
6	**54520**	Bearing
7	**97116**	Shim
8	**97117**	Shim
9	**97118**	Shim
10	**02623**	Gear - 12,000 RPM
	02597	Gear - 15,000 RPM
	02599	Gear - 20,000 RPM
11	**02042**	Wick - 12,000 RPM
	02044	Wick - 15 & 20,000 RPM
12	**02043**	Wick - 12,000 RPM
	02045	Wick - 15 & 20,000 RPM
13	**02031**	Housing – Includes:
13A	**01041**	Gear Oil Fitting
13B	**02041**	Gear Oil Plate
13C	**02033**	Needle Bearing
14	**02624**	Pinion - 12,000 RPM
	02598	Pinion - 15,000 RPM
	02600	Pinion - 20,000 RPM
15	**01461**	Lock Nut
16	**02697**	Bearing
17	**54543**	Shim
18	**54544**	Shim
19	**54551**	Shim
20	**01478**	Bearing Plate
21	**50767**	Pin (2)
22	**01479**	Spacer
23	**02037**	Rotor
24	**01480**	Blade (4/pkg.)
25	**01476**	Cylinder
26	**02676**	Bearing Plate
27	**02696**	Bearing
28	**02679**	Shield
29	**01547**	Collar
30	**02066**	Housing - **50727**
	02067	Housing - **50728**
	02068	Housing - **50729**
31	**12132**	Pin
32	**01449**	Valve Stem
33	**01448**	Throttle Lever
34	**01464**	Seal
35	**01472**	Tip Valve
36	**01468**	Spring
37	**01564**	Spacer
38	**95558**	Retaining Ring
39	**95730**	O-Ring
40	**01469**	Speed Regulator Assy.
41	**01024**	O-Ring
42	**95438**	O-Ring
43	**95711**	Retaining Ring
44	**94521**	Muffler Base
45	**94528**	Felt Muffler
46	**94522**	Muffler Cap
47	**95375**	O-Ring
48	**94526**	Spacer
49	**94523**	Inlet Adapter
50	**94519**	Muffler Assembly

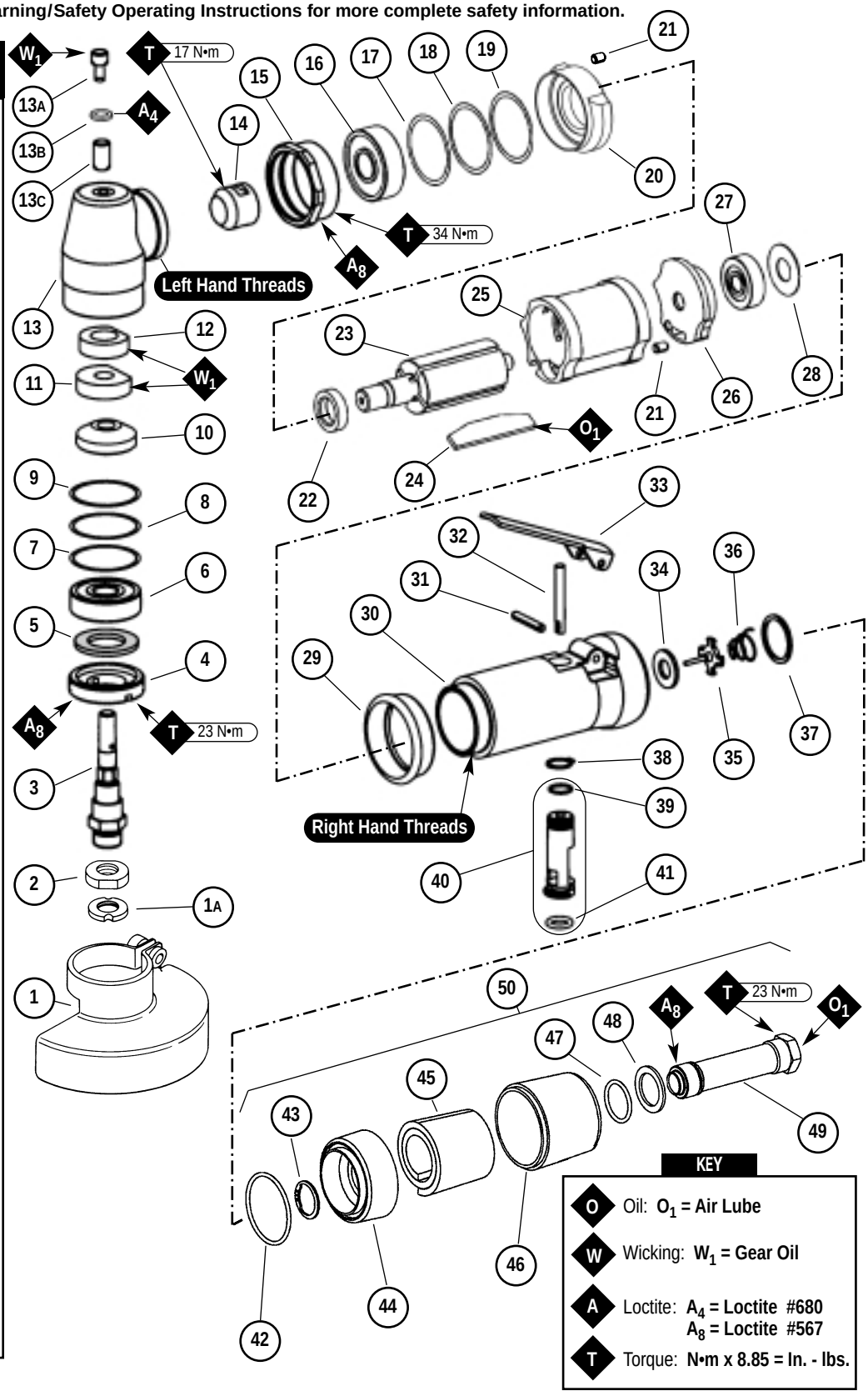

Important Operating, Maintenance and Safety Instructions

Carefully read all instructions before operating or servicing any Dynabrade® Abrasive Power Tool.
Warning: Hand, wrist and arm injury may result from repetitive work motion and overexposure to vibration.
Important: All Dynabrade air tools must be used with a Filter-Regulator-Lubricator to maintain all warranties.

Operating Instructions:



Warning: Eye, face, respiratory, sound, and body protection must be worn while operating power tools. Failure to do so may result in serious injury or death. Follow safety procedures posted in workplace.

1. With power source disconnected from tool, securely fasten abrasive/accessory on tool.
2. Install air fitting into inlet bushing of tool. **Important:** Secure inlet bushing of tool with a wrench before attempting to install the air fitting to avoid damaging valve body housing.
3. Connect power source to tool. Be careful not to depress throttle lever in the process.
4. Check tool speed with tachometer. If tool is operating at a higher speed than the RPM marked on the tool or operating improperly, the tool should be serviced to correct the cause before use.

Maintenance Instructions:

1. Check tool speed regularly with a tachometer. If tool is operating at a higher speed than the RPM marked on the tool, the tool should be serviced to correct the cause before use.
2. Some silencers on air tools may clog with use. Clean and replace as required.
3. All Dynabrade air motors should be lubricated. Dynabrade recommends one drop of air lube per minute for each 10 SCFM (example : if the tool specification state 40 SCFM, set the drip rate of your filter-lubricator at 4 drops per minute). Dynabrade Air Lube (P/N **95842**: 1pt. 473ml.) is recommended.
4. An air line filter-regulator-lubricator must be used with this air tool to maintain all warranties. Dynabrade recommends the following: **11405** Air Line Filter-Regulator-Lubricator — Provides accurate air pressure regulation, two-stage filtration of water contaminants and micro-mist lubrication of pneumatic components. Operates up to 40 SCFM @ 100 PSI has 3/8" NPT female ports.
5. Lubricate wick system through angle gear head Gear Oil fitting with 2-3 drops every **8 hours** of use for maximum gear life. **Important:** Use recommended angle gear oil only for wick system. **Do not contaminate wick with any other oil or grease product (Order 95848 Gear Oil and 95541 Gun).**
6. Use only genuine Dynabrade replacement parts. To reorder replacement parts, specify the **Model #**, **Serial #** and **RPM** of your machine.
7. A motor tune-up kit (P/N **96179**) is available which includes assorted parts to help maintain motor in peek operating condition. Please refer to Dynabrade's Preventative Maintenance Schedule for a guide to expectant life of component parts.
8. Mineral spirits are recommended when cleaning the tool and parts. Do not clean tool or parts with any solvents or oils containing acids, esters, keytones, chlorinated hydrocarbons or nitro carbons.

Safety Instructions:

Products offered by Dynabrade should not be converted or otherwise altered from original design without expressed written consent from Dynabrade, Inc.



- **Important:** User of tool is responsible for following accepted safety codes such as those published by the American National Standards Institute (ANSI).
- Operate machine for one minute before application to workpiece to determine if machine is working properly and safely before work begins.
- Always disconnect power supply before changing abrasive/accessory or making machine adjustments.
- Inspect abrasives/accessories for damage or defects prior to installation on tools.
- Please refer to Dynabrade's Warning/Safety Operating Instructions Tag (Reorder No. **95903**) for more complete safety information.
- **Warning:** Hand, wrist and arm injury may result from repetitive work, motion and overexposure to vibration.

Notice

All Dynabrade motors use the highest quality parts and metals available and are machined to exacting tolerances. The failure of quality pneumatic motors can most often be traced to an unclean air supply or the lack of lubrication. Air pressure easily forces dirt or water contained in the air supply into motor bearings causing early failure. It often scores the cylinder walls and the rotor blades resulting in limited efficiency and power. Our warranty obligation is contingent upon proper use of our tools and cannot apply to equipment which has been subjected to misuse such as unclean air, wet air or a lack of lubrication during the use of this tool.

One Year Warranty

Following the reasonable assumption that any inherent defect which might prevail in a product will become apparent to the user within one year from the date of purchase, all equipment of our manufacture is warranted against defects in workmanship and materials under normal use and service. We shall repair or replace at our factory, any equipment or part thereof which shall, within one year after delivery to the original purchaser, indicate upon our examination to have been defective. Our obligation is contingent upon proper use of Dynabrade tools in accordance with factory recommendations, instructions and safety practices. It shall not apply to equipment which has been subject to misuse, negligence, accident or tampering in any way so as to affect its normal performance. Normally wearable parts such as bearings, contact wheels, rotor blades, etc., are not covered under this warranty.

Model Number	Length Inch (mm)	Height Inch (mm)	Weight Pound (kg)	Spindle Thread	Air Flow Rate SCFM (LPM)	Sound Level	Motor HP (W)	Motor RPM
All Models	7-5/16" (186)	2-7/8" (71)	1.22 lbs. (.54)	3/8" -24 male	21 (595)	84-86 dBA	.43 (321)	12,000-20,000

Additional specifications: Air Inlet Thread 1/4" NPT • Hose Size 3/8" (9 mm) • Air Pressure 90 PSI (6.2 Bars)

Disassembly/Assembly Instructions - Right-Angle Tools

Important: Manufacturer's warranty is void if tool is disassembled before warranty expires.
Please refer to parts breakdown for part identification.

Gear Casing Disassembly:

Important: inlet adapter must be secured before attempting to remove air fitting to avoid damaging composite motor housing.

1. Secure motor housing in vise using **52296** Repair Collar or padded jaws, so that **02031** Right-Angle Head Housing is facing up.
2. Using an adjustable pin wrench turn **02035** Lock Nut counter-clockwise.
3. Remove spindle from **02031** Housing.
4. Using a screw driver, pick wicks (2) out from housing (Note: wick may already be removed with the spindle).
5. Using a 34.0 mm crows foot wrench, remove **01461** Lock Nut by turning counter-clockwise.
6. Place **02031** Housing in an arbor press with spindle opening facing down.
7. Using a 9.0 mm drift pin press out **02041** Gear Oil Plate and **02033** Bearing (located on the top of the **02031** Housing).

Motor Disassembly:

1. Remove tool from vise.
2. Pull motor assembly from housing assembly.
3. Disassemble motor assembly by pressing **02037** Rotor from **02696** Rear Bearing. Press **02696** Bearing out of **02676** Rear Bearing Plate.
4. Remove **01476** Cylinder and **01480** Blades.
5. Place **02037** Rotor in a vise with soft jaws and unscrew pinion using a counter-clockwise direction.
6. Slip **01478** Front Bearing Plate off of **02037** Rotor.
7. Remove **01479** Spacer from **02037** Rotor.
8. Remove **02697** Bearing from **01478** Front Bearing Plate.
9. Remove shims from **01478** Front Bearing Plate.

Valve Body Disassembly:

1. Secure motor housing in **52296** Repair Collar or padded jaws with motor opening facing down.
2. Unscrew inlet adapter turning counter-clockwise.
3. Using needle nose pliers, remove **01468** Spring, **01472** Tip Valve, and **01464** Seal.
4. Resecure housing in vise making sure throttle lever **01448** Throttle Lever and **12132** Pin are accessible.
5. Using a 2.5mm diameter drift pin and hammer, tap **12132** Pin until it falls out of the housing and remove throttle lever.
6. Remove from vise.
7. Remove **95558** Retaining Ring using retaining ring pliers.
8. Push **01469** Speed Regulator from housing.

Gear Casing Reassembly:

1. Press **01041** Gear Oil Fitting into **02041** Gear Oil Plate with **01041** Gear Oil Fitting Head recessed into **02041** Gear Oil Plate.
2. Place 2 drops of #680 Loctite® (or equivalent) at location below.
3. Place **02041** Gear Oil Plate into **02031** Housing as shown.
4. Press **02033** Needle Bearing into **02031** Housing as shown.

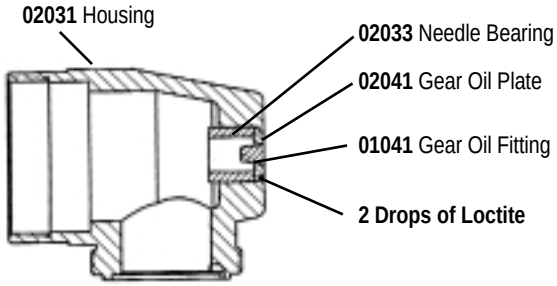

Motor Reassembly:

Important: Make sure parts have been cleaned and thoroughly inspected for wear and damage before reassembly.

1. Place **02037** Rotor in soft jaw vise with threaded spindle facing upward.
2. Slip **01479** Spacer onto **02037** Rotor.
3. Place a .002" Shim into **01478** Front Bearing Plate as an initial spacing then slip **02697** Bearing into **01478** Front bearing Plate. Slip assembly onto **02037** Rotor. Tighten pinion onto rotor torque 17 N•m, 150 in.-lbs.
4. Check clearance between rotor and bearing plate by using a .001" feeler gauge. Clearance should be at .001" to .0015". Adjust clearance by repeating steps 1-3 with different shim if necessary.
5. Once proper rotor gap clearance is achieved, install well lubricated **01480** Blades into **02037** Rotor (use **95842** Dynabrade AIr Lube or equivalent).
6. Install **01476** Cylinder so it rests against the **01478** Bearing Plate (making sure inlet holes of cylinder are in alignment with inlet holes in **02676** Rear Bearing Plate).
7. Press **02696** Bearing into **02676** Rear Bearing Plate. Press these parts onto **02037** Rotor. **Important:** Fit must be snug between bearing plates and cylinder. If too tight, rotor will not turn freely. Rotor must then be lightly tapped at press fit end so it will turn freely while still maintaining a snug fit. A loose fit will not achieve the proper preload of motor bearings.
8. Secure housing in vise using **52296** Repair Collar or padded jaws so that motor cavity faces upward.
9. Install motor assembly in housing, make sure motor drops all the way into housing. (**Note:** Align the nodes in side of housing).
10. Slip **01547** Insulator Collar over **01461** Lock Nut.
11. Apply Loctite® #567 to threads, and screw **01461** Lock Nut (left-hand threads), onto **02031** Housing.
12. Thread **02031** Housing and **01461** Lock Nut Assembly onto motor housing assembly (right-hand threads), drawing the two assemblies together.
13. Adjust orientation of throttle lever to agree with your grip and comfort level allowing for additional rotation due to tightening to set torque.

(continued on next page)

Disassembly/Assembly Instructions - (continued)

14. Using a 34.0 mm crow foot and a torque wrench set at (34 N•M/300 in. - lbs.), secure the gear case housing and lock nut in place.

15. Press **54520** Bearing and then gear onto spindle shaft, making sure drive hexes are aligned.

16. Place **01486** Silencer over spindle shaft at threaded end.

17. Slip bottom wick over spindle shaft, then place top wick over spindle shaft.

18. Insert spindle shaft assembly into **02031** Housing.

19. Torque **02035** Lock Nut to 23 N•m, 200 in. - lbs

20. Shim spindle assembly using shims if required.
Note: When assembling angle-head assembly onto the motor housing, make sure flats on the wicks are both facing the pinion or tool will not run.

Tool Assembly is complete. Please allow 30 minutes for adhesives to cure before operating tool.

Important: Before operating, place 2-3 drops of Dynabrade Air Lube (P/N **95842**) directly into air inlet with throttle lever depressed. Operate tool for 30 seconds to determine if tool is operating properly and to allow lubricating oils to properly penetrate motor. Motor should now be tested for proper operation at 90 PSI. If motor does not operate properly or operates at a higher RPM than marked on the tool, the tool should be serviced to correct the cause before use.

Loctite® is a registered trademark of Loctite Corp.

Accessories



96179 Motor Tune-Up Kit

- Includes assorted parts to help maintain motor in tip-top shape.



Dynabrade Angle Gear Oil

- Specifically formulated to saturate wick system in right angle gear head.
- **95848:** 2 oz. tube
- **95849:** 10 oz. tube



Dynaswivel®

- Swivels 360° at two locations which allows an air hose to drop straight to the floor, no matter how the tool is held.
- **94300** 1/4" NPT

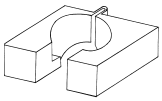

52296 Repair Collar

- Specially designed collar for use in vise to prevent damage to valve body of tool during disassembly/assembly

Visit our Web Site: www.Dynabrade.com

Email: Customer.Service@Dynabrade.com

DYNABRADE®

DYNABRADE, INC., 8989 Sheridan Drive • Clarence, NY 14031-1490 • Phone: (716) 631-0100 • Fax: 716-631-2073 • International Fax: 716-631-2524
DYNABRADE EUROPE S.àr.l., Zone Artisanale • L-5485 Wormeldange—Haut, Luxembourg • Telephone: 352 76 84 94 • Fax: 352 76 84 95

© DYNABRADE, INC., 2000

PRINTED IN USA