Models:
10410 – 5" Non-Vacuum
10411 – 5" Vac-Ready
10412 – 5" Basic Vac
10413 – 5" Deluxe Vac
10414 – 5" Central Vac-Ready
10420 – 6" Non-Vacuum
10421 – 6" Vac-Ready
10422 – 6" Basic Vac
10423 – 6" Deluxe Vac
10424 – 6" Central Vac-Ready

AUTOMOTIVE

Parts Page Reorder No. APD99•01
Effective January, 1999
Supersedes PD96•53

5" & 6" Two Hand Dynorbital® Sander

Air Powered, Random Orbital Sander,12,000 RPM ,
For serial number 9B1000 and higher.

⚠WARNING **Always operate, inspect and maintain this tool in accordance with the Safety Code for portable air tools (ANSI B186.1) and any other applicable safety codes and regulations. Please refer to Dynabrade's Warning/Safety Operating Instructions for more complete safety information.**

Index Key

No.	Part	Description
1	**56104**	5" Vac Sanding Pad
	56105	6" Vac Sanding Pad
	56106	5" Non-Vac Sanding Pad
	56107	6" Non-Vac Sanding Pad
2	**95858**	Spacer
	95859	Spacer*
3	**57737**	6" Vacuum Shroud (CVR)
3A	**96425**	Screw (4) (CVR)
3B	**95886**	Washer (4) (CVR)
4	**57369**	Lip Seal Shroud
5	**96166**	Set Screw
6	**57332**	Lock Ring
7	**57069**	Balancer Shaft
8	**95630**	Snap Ring
9	**95628**	Bearing Shield
10	**56053**	Bearing Seal
11	**56052**	Balancer Bearing
12	**57364**	5" Motor Shaft Balancer
	57365	6" Motor Shaft Balancer
13	**54673**	Rotor Key
14	**02695**	Bearing
15	**54630**	Front Bearing Plate
16	**54674**	Blade (5/pkg.)
17	**54671**	Rotor
18	**54631**	Cylinder Assy. (incl. #18)
19	**95865**	Line-up Pin
20	**54629**	Rear Bearing Plate
21	**01206**	Bearing
22	**95626**	Retaining Ring
23	**10407**	Housing - **10410**
	10408	Housing - **10411, 12, 13**
	10409	Housing - **10414**
	10415	Housing - **10420**
	10416	Housing - **10421, 22, 23**
	10417	Housing - **10424**
24	**57394**	Valve Nozzle (S.G.Vac)
25	**57362**	Gasket
26	**57382**	Non-Vac & Ctl. Vac
	57383	Vacuum & S.Gen. Vac
27	**95886**	Washer (4)
28	**01211**	Washer (4)
29	**97010**	Screw (4)
30	**57396**	Valve Stem**
31	**96123**	Screw (2)
32	**01464**	Seal
33	**01472**	Tip Valve
34	**01468**	Spring
35	**57346**	Gasket
36	**57376**	Tube (S.G.Vac only)
37	**57373**	Adapter
38	**01024**	O-Ring
39	**01024**	O-Ring
40	**57343**	Speed Regulator
41	**57344**	Lever***
42	**01017**	Pin
43	**95558**	Retaining Ring
44	**01494**	Inlet Bushing
45	**01211**	Washer (2)
46	**01788**	Screw (2)
47	**54199**	Muffler Seat(CV, NV only)
48	**54195**	Muffler (3) (CV, NV only)
49	**54194**	Muffler Cap(CV, NV only)

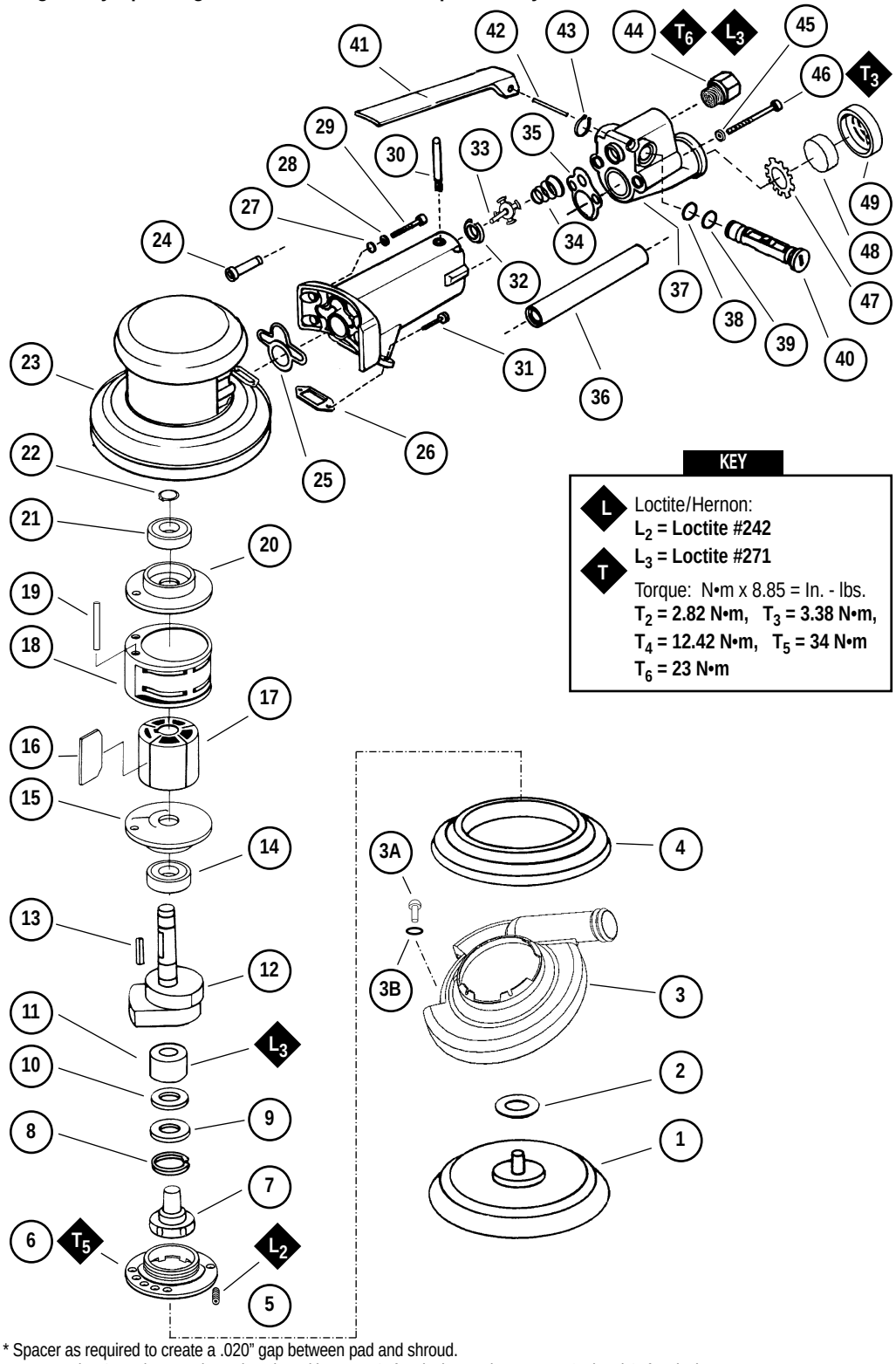

KEY

- **L** Loctite/Hernon:
  L_2 = Loctite #242
  L_3 = Loctite #271
- **T** Torque: N•m x 8.85 = In. - lbs.
  T_2 = 2.82 N•m, T_3 = 3.38 N•m,
  T_4 = 12.42 N•m, T_5 = 34 N•m
  T_6 = 23 N•m

* Spacer as required to create a .020" gap between pad and shroud.
****57375** Valve Stem (For use in conjunction with **01089** Safety-lock Lever) *****01089** Optional Safety-lock Lever.

Important Operating, Maintenance and Safety Instructions

Carefully read all instructions before operating or servicing any Dynabrade® Abrasive Power Tool.
Warning: Hand, wrist and arm injury may result from repetitive work motion and overexposure to vibration.
Important: All Dynabrade air tools must be used with a Filter-Regulator-Lubricator to maintain all warranties.

Operating Instructions:

Warning: Eye, face and body protection must be worn while operating power tools. Failure to do so may result in serious injury or death. Follow safety procedures posted in workplace.

1. With power source disconnected from tool, securely fasten abrasive/accessory on tool.
2. Install air fitting into inlet bushing of tool. **Important:** Secure inlet bushing of tool with a wrench before attempting to install the air fitting to avoid damaging valve body housing.
3. Connect power source to tool. Be careful **not** to depress throttle lever in the process.
4. Check tool speed with tachometer. If tool is operating at a higher speed than the RPM marked on the tool or operating improperly, the tool should be serviced to correct the cause before use.

Maintenance Instructions:

1. Check tool speed regularly with a tachometer. If tool is operating at a higher speed than the RPM marked on the tool, the tool should be serviced to correct the cause before use.
2. Some silencers on air tools may clog with use. Clean and replace as required.
3. All Dynabrade air motors should be lubricated. Dynabrade recommends one drop of air lube per minute for each 10 SCFM (example : if the tool specification state 40 SCFM, set the drip rate of your filter-lubricator at 4 drops per minute). Dynabrade Air Lube (P/N **95842**: 1pt. 473ml.) is recommended.
4. An air line filter-regulator-lubricator must be used with this air tool to maintain all warranties. Dynabrade recommends the following: **11411** Air Line Filter-Regulator-Lubricator — Provides accurate air pressure regulation, two-stage filtration of water contaminants and micro-mist lubrication of pneumatic components. Operates 40 CFM @ 100 PSI has 3/8" NPT female ports.
5. Use only genuine Dynabrade replacement parts. To reorder replacement parts,please specify the **Model #**, **Serial #** and **RPM** of your machine.
6. A motor tune-up kit (P/N **96122**) is available which includes assorted parts to help maintain motor in peek operating condition.
7. Mineral spirits are recommended when cleaning the tool and parts. Do not clean tool or parts with any solvents or oils containing acids, esters, keytones, chlorinated hydrocarbons or nitro carbons.

Safety Instructions:

Products offered by Dynabrade should not be converted or otherwise altered from original design without expressed written consent from Dynabrade, Inc.

- **Important:** User of tool is responsible for following accepted safety codes such as those published by the American National Standards Institute (ANSI).
- Operate machine for one minute before application to workpiece to determine if machine is working properly and safely before work begins.
- Always disconnect power supply before changing abrasive/accessory or making machine adjustments.
- Inspect abrasives/accessories for damage or defects prior to installation on tools.
- Please refer to Dynabrade's Warning/Safety Operating Instructions Tag (Reorder No. **95903**) for more complete safety information.
- **Warning:** Hand, wrist and arm injury may result from repetitive work, motion and overexposure to vibration.

Notice

All Dynabrade motors use the highest quality parts and metals available and are machined to exacting tolerances. The failure of quality pneumatic motors can most often be traced to an unclean air supply or the lack of lubrication. Air pressure easily forces dirt or water contained in the air supply into motor bearings causing early failure. It often scores the cylinder walls and the rotor blades resulting in limited efficiency and power. Our warranty obligation is contingent upon proper use of our tools and cannot apply to equipment which has been subjected to misuse such as unclean air, wet air or a lack of lubrication during the use of this tool.

Full One Year Warranty

Following the reasonable assumption that any inherent defect which might prevail in a product will become apparent to the user within one year from the date of purchase, all equipment of our manufacture is warranted against defects in workmanship and materials under normal use and service. We shall repair or replace at our factory, any equipment or part thereof which shall, within one year after delivery to the original purchaser, indicate upon our examination to have been defective. Our obligation is contingent upon proper use of Dynabrade tools in accordance with factory recommendations, instructions and safety practices. It shall not apply to equipment which has been subject to misuse, negligence, accident or tampering in any way so as to affect its normal performance. Normally wearable parts such as bearings, contact wheels, rotor blades, etc., are not covered under this warranty.

Machine Description	Pad Inch (mm)	Length Inch (mm)	Weight Pound (kg)	Height Inch (mm)	Air Flow Rate SCFM (LPM)	Sound Level	Motor HP (W)	Motor RPM	Air Pressure PSI (Bars)
All Models	5" (127)	10-1/4" (260)	2.7 lbs. (1.2)	4-1/2"(114)	25 (708)	82 dBA	.4 (298)	12,000	90 (6.2)
All Models	6" (152)	10-1/4" (260)	2.7 lbs. (1.2)	4-1/2"(114)	25 (708)	82 dBA	.4 (298)	12,000	90 (6.2)

Additional specifications: Spindle Thread 5/16"-24 Female • Air Inlet Thread 1/4" (6 mm) NPT • Hose Size 1/8" (9 mm)

Motor Assembly/Disassembly Instructions

Important: Manufacturers warranty is void if tool is disassembled before warranty expires.
These instructions are for use in conjunction with Part Number 57260 Repair Kit, which includes special tools for proper disassembly/assembly of tool. A complete tune-up kit, part number 96122 is available which includes assorted parts to help maintain motor in tip-top shape

To Disassemble:

1. Invert machine and secure in vice, using **57092** Collar (supplied in **57260** Repair Kit) or padded jaws.
2. Remove sanding pad with **50679** Open-end Wrench (supplied with sander).
3. Using a 2mm hex key remove the **96166** Set Screw.
4. Insert **56058** Lock Ring Wrench (supplied in **57260** Repair Kit) into corresponding tabs of lock ring and unscrew. Motor may now be lifted out for service.
5. Remove **95626** Retainer Ring. Upper motor may now be disassembled.
6. The **54629** Rear Bearing Plate contains a "press" fit bearing. Remove the rear plate assembly by securing the **54631** Cylinder in a standard 2 inch bearing separator or use a standard bearing puller gripped on the cylinder inlet/exhaust area. Push the motor shaft balancer through the bearing. Remove cylinder, rotor, vanes and key.
7. Remove **54630**Front Plate and **02695** Front Motor Bearing, using a small #2 arbor press. Support the edges of the front plate while pressing on the small end of the motor shaft balancer. The **54630** Front Plate should separate from **02695** Front Motor Bearing.
   a.) If, during step 6, the front plate and **02695** Front Motor Bearing remain together, push **56081** Bearing Chuck (supplied in **57260** Repair Kit) with ridged side forward into bearing side of assembly until it locks.
   b.) Push **95890** Taper Pin (supplied in **57260** Repair Kit) with narrow side forward into front plate side of assembly. Press the bearing out using a small #2 arbor press.
8. Remove **01206** Bearing from the **54629** Rear Bearing Plate by using a bearing press tool.
9. Disassemble the balancer assembly as follows:
   a.) Remove **95630** Snap ring. Screw the threaded portion of the **56056** Bearing Puller (supplied in **57260** Repair Kit) into the **57069** Balancer Shaft. **Note:** Heat the outside of the motor shaft balancer to approximately 200° F. Now, using the slider weight, pull the assembly out.
   b.) Press off **56052** Bearing and remove loose parts.
10. If during step 8, the **56052** Bearing remains in the motor shaft balancer, it can be removed by the heating the shaft balancer again and using either an inside bearing puller or a blind hole bearing puller.

To Reassemble:

Important: Be certain parts are clean and in good repair before reassembling.

1. Assemble the balancer assembly as follows:
   a.) Install **95630** Snap Ring onto **57069** Balancer Shaft. Install **95628** Shield with convex face toward hex of balancer shaft.
   b.) Install **56053** Bearing Seal. **Note:** Be certain seal is pressed completely over shaft step.
   c.) Apply a slight amount of #290 Loctite® (or equivalent) to inside diameter of the **56052** Bearing and the outside diameter of the **57069** Balancer Shaft.
   d.) Press fit **56052** Bearing, with seal side toward hex of balancer shaft, up to shaft step using **57091** Bearing Press Tool (supplied in **57260** Repair Kit) (Drawing 1).
2. Place the motor shaft balancer in a soft jaw vise with large end-up.

Drawing 1

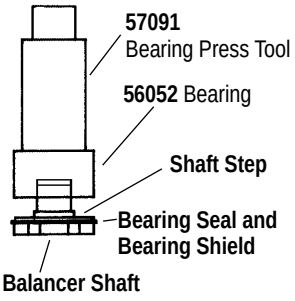

3. Apply a slight amount of #271 Loctite® (or equivalent) and spread over several places around the outside diameter of the **56052** Bearing and slide balancer shaft assembly into the motor shaft balancer until **56052** Bearing is firmly seated at bottom. Squeeze **95630** Snap Ring into groove in motor shaft balancer to complete the assembly. Remove from vise.
4. Press **02695** Bearing onto the motor shaft balancer down to the shoulder using **57091** Bearing Press Tool (Drawing 2).
5. Press **54630** Front Bearing Plate onto **02695** Bearing and check for smooth rotation (Drawing 3).
6. Place **54673** Rotor Key, **54671** Rotor, and **54674** Blades onto shaft. **Note:** Be certain rotor "floats" easily on the shaft. Because the design of this motor uses a "floating rotor", There is no need to set or adjust gap between the rotor and the end plates.
7. Place **54631** Cylinder over rotor. The “short” line-up pin goes toward the **54630** Front Bearing Plate.
8. Place **54629** Rear Bearing Plate (with **01206** Rear Bearing pressed into place) over shaft and “long” end of line-up pin and press fit in place (Drawing 4).
9. Install **95626** Retaining Ring concave side toward motor. **Note** Be certain that retaining ring is completely pressed down onto its groove on the shaft.
10. Grease the rubber seals inside the housing using a small amount of multi purpose grease or petroleum jelly.
    Note: Be certain that rubber seals in housing have not pulled out of their seat during disassembly. If this has happened re-seat seals by pushing them until they are flush with inside diameter.

(continued on next page)

Drawing 2

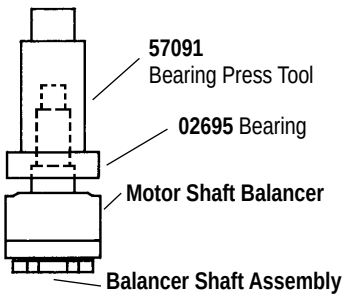

Drawing 3

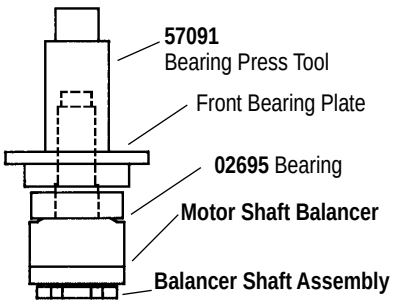

Drawing 4

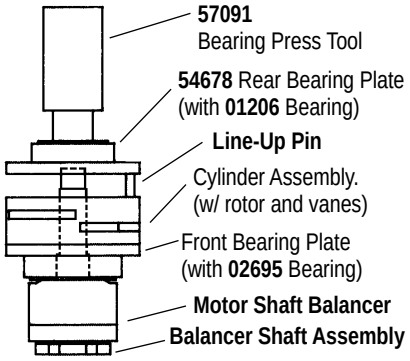

Motor Disassembly/Assembly Instructions (continued)

11. Secure motor housing in vise, using **57092** Collar or padded jaws. Slide motor assembly into secured housing. **Note:** With handle pointing toward you while looking into motor bore, be certain line-up pin enters slot to right side of center.

12. Tighten 57332 Lock Ring with 56058 Lock Ring Tool to 34 N•m/300 on. - lbs. Attach shroud and weight-mated sanding pad.

13. Apply one drop of #242 Loctite® (or equivalent) to threads of **96166** Set Screw and reinstall into **57332** Lock Ring. Do not over tighten.

To Disassemble Valve And Speed Regulator Assemblies:

1. Invert tool and place in soft jaw vise or use **57092** Repair Collar.

2. Loosen and remove **01788** Screws (2) and **01211** Lock Washers (2) from **57373** Adapter.

3. Carefully remove **57373** Adapter making sure no parts fall to the ground. On non-vacuum and central vacuum models: pry off **54194** Muffler Cap and remove **54195** Muffler (3).

4. Remove **57343** Speed Regulator by detaching **95558** Retaining Ring with a pair of snap ring pliers. Remove **01024** O-rings with a small screwdriver or razor.

5. Remove tip valve assembly from housing.

To Reassemble Valve And Speed Regulator Assemblies:

1. Lightly lubricate **01024** O-rings and slide them on **57343** Speed Regulator. Install through regulator hole on **57373** Adapter. Place **95558** Retaining Ring on groove of speed regulator using a pair of retaining ring pliers.

2. Line-up hole in valve stem with inlet hole in handle. Place **01464** Seal in handle. Insert **01472** Tip Valve so that metal pin goes through the valve stem. Place **01468** Spring into the housing, small end first.

3. Gently line-up **57373** Adapter onto handle so no parts shift when tightening. Replace and tighten **01788** Screws (2) and **01211** Lock Washers (2).

Motor assembly is complete. Please allow 30 minutes for adhesives to cure before operating tool.

Important: Motor should operate at 12,000 RPM at 6.2 bar (90 PSI). RPM should be checked with a reed tachometer. Before operating, we recommend that 3-4 drops of pneumatic tool oil be placed directly into the air inlet with throttle lever depressed. Operate tool for 30 seconds to determine if machine is operating properly and to allow lubricating oils to properly dispense through machine.

Loctite® is a registered trademark of the Loctite Corp.

Accessories



54290 "Bag-in-Box" System

- **95361** Air Line 5' long.
- **50682** Flex-Hose 1" dia. x 6' long.
- **95362** Rubber Connectors (5).
- **95575** Durable Box Receptacle.
- Sample paper bag included. Paper bag reorder: **50692** (400/case) or **50693** (24 per package.)



50617, 56303 — 6' Long Flex-Hose Systems

50617: Has **50683** Standard Reusable Cloth Bag with hook 'n loop end for easy emptying.

56303: Has **56304** Zipper-Lock Bag.

- Both systems include 6' long **50682** Flex-Hose.
- Shown with optional **95361** Air Line (1/4").



57260 Motor Repair Kit:

- Contains special tools for Disassembly/Assembly of machine.



96122 Motor Tune-Up Kit:

- Includes assorted parts to help maintain motor in tip-top shape.

Visit our new Web Site On-Line: http://www.dynabrade.com

DYNABRADE®

DYNABRADE, INC., 8989 Sheridan Drive • Clarence, NY 14031-1490 • Phone: (716) 631-0100 • Fax: 716-631-2073 • International Fax: 716-631-2524
DYNABRADE EUROPE S.àr.l., Zone Artisanale • L-5485 Wormeldange—Haut, Luxembourg • Telephone: 352 76 84 94 • Fax: 352 76 84 95

©DYNABRADE, INC., 1999

PRINTED IN USA