**AUTOMOTIVE**

Parts Page Reorder No. APD97•01
Effective February, 1997
Supercedes APD96•01

# Wet Dynorbital® Supreme

## *Air Powered Random Orbital Sander*

Models:
10340 - 3-1/2" Basic Wet, 3/16"
10341 - 3-1/2" Deluxe Wet, 3/16"
10342 - 5" Basic Wet, 3/16"
10343 - 5" Deluxe Wet, 3/16"
10344 - 6" Basic Wet, 3/16"
10345 - 6" Deluxe Wet, 3/16"
10353 - 5" Deluxe Wet, 3/32"
10354 - 6" Deluxe Wet, 3/32"

**KEY**

- O — Oil
- G — Grease
- L — Loctite/Hernon: $L_2$ = Loctite #271
- T — Torque: N•m x 8.85 = In. - lbs. $T_2$ = 23 N•m, $T_3$ = 28 N•m

**⚠WARNING** **Always operate, inspect and maintain this tool in accordance with the Safety Code for portable air tools (ANSI B186.1) and any other applicable safety codes and regulations. Please refer to Dynabrade's Warning/Safety Operating Instructions for more complete safety information.**

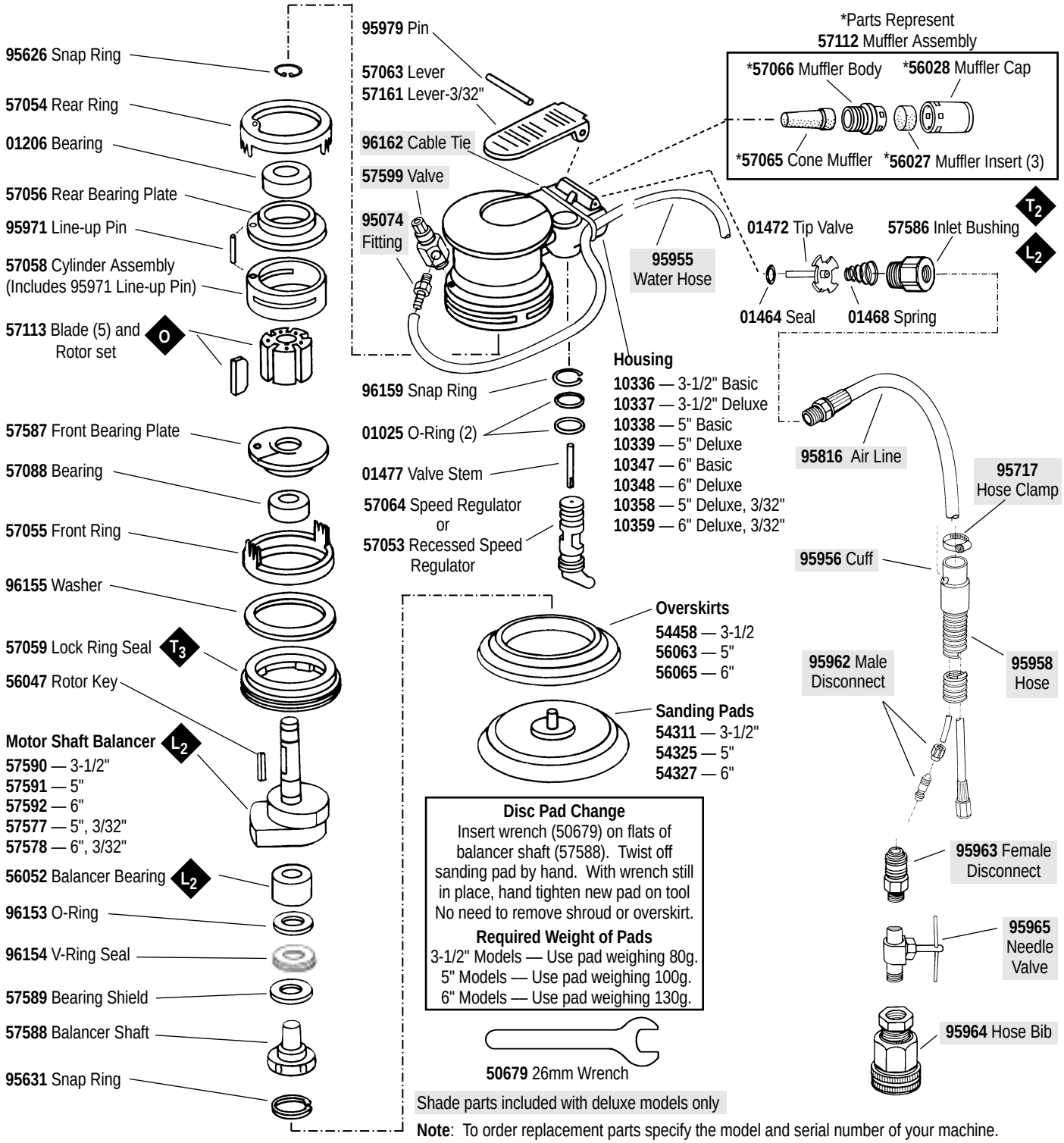


**Disc Pad Change**
Insert wrench (50679) on flats of balancer shaft (57588). Twist off sanding pad by hand. With wrench still in place, hand tighten new pad on tool No need to remove shroud or overskirt.

**Required Weight of Pads**
3-1/2" Models — Use pad weighing 80g.
5" Models — Use pad weighing 100g.
6" Models — Use pad weighing 130g.

**50679** 26mm Wrench

Shade parts included with deluxe models only

**Note**: To order replacement parts specify the model and serial number of your machine.

# Important Operating, Maintenance and Safety Instructions

**Carefully read all instructions before operating or servicing any Dynabrade® Abrasive Power Tool.**
**Warning:** Hand, wrist and arm injury may result from repetitive work motion and overexposure to vibration.
**Important:** All Dynabrade air tools must be used with a Filter-Regulator-Lubricator to maintain all warranties.

## Operating Instructions:

**Warning:** Eye, face and body protection must be worn while operating power tools. Failure to do so may result in serious injury or death. Follow safety procedures posted in workplace.

1. With power source disconnected from tool, securely fasten abrasive/accessory on tool.
2. Install air fitting into inlet bushing of tool. **Important:** Secure inlet bushing of tool with a wrench before attempting to install the air fitting to avoid damaging valve body housing.
3. Connect power source to tool. Be careful not to depress throttle lever in the process.
4. Check tool speed with tachometer. If tool is operating at a higher speed than the RPM marked on the tool or operating improperly, the tool should be serviced to correct the cause before use.

## Maintenance Instructions:

1. Check tool speed regularly with a tachometer. If tool is operating at a higher speed than the RPM marked on the tool, the tool should be serviced to correct the cause before use.
2. Some silencers on air tools may clog with use. Clean and replace as required.
3. All Dynabrade air motors should be lubricated. Dynabrade recommends one drop of air lube per minute for each 10 SCFM (example : if the tool specification state 40 SCFM, set the drip rate of your filter-lubricator at 4 drops per minute). Dynabrade Air Lube (P/N **95842**: 1pt. 473ml.) is recommended.
4. An air line filter-regulator-lubricator must be used with this air tool to maintain all warranties. Dynabrade recommends the following: **11289** Air Line Filter-Regulator-Lubricator — Provides accurate air pressure regulation, two-stage filtration of water contaminants and micro-mist lubrication of pneumatic components. Operates 40 CFM @ 100 PSI has 3/8" NPT female ports.
5. Use only genuine Dynabrade replacement parts. To reorder replacement parts, specify the **Model #**, **Serial #**, and **RPM** of your machine.
6. A motor tine-up kit (P/N **96018**) is available which includes assorted parts to help maintain motor in peek operating condition.
7. Mineral spirits are recommended when cleaning the tool and parts. Do not clean tool or parts with any solvents or oils containing acids, esters, keytones, chlorinated hydrocarbons or nitro carbons.

## Safety Instructions:

**Products offered by Dynabrade should not be converted or otherwise altered from original design without expressed written consent from Dynabrade, Inc.**

- **Important:** User of tool is responsible for following accepted safety codes such as those published by the American National Standards Institute (ANSI).
- Operate machine for one minute before application to workpiece to determine if machine is working properly and safely before work begins.
- Always disconnect power supply before changing abrasive/accessory or making machine adjustments.
- Inspect abrasives/accessories for damage or defects prior to installation on tools.
- Please refer to Dynabrade's Warning/Safety Operating Instructions Tag (Reorder No. **95903**) for more complete safety information.

## Notice

All Dynabrade motors use the highest quality parts and metals available and are machined to exacting tolerances. The failure of quality pneumatic motors can most often be traced to an unclean air supply or the lack of lubrication. Air pressure easily forces dirt or water contained in the air supply into motor bearings causing early failure. It often scores the cylinder walls and the rotor blades resulting in limited efficiency and power. Our warranty obligation is contingent upon proper use of our tools and cannot apply to equipment which has been subjected to misuse such as unclean air, wet air or a lack of lubrication during the use of this tool.

## One Year Warranty

Following the reasonable assumption that any inherent defect which might prevail in a product will become apparent to the user within one year from the date of purchase, all equipment of our manufacture is warranted against defects in workmanship and materials under normal use and service. We shall repair or replace at our factory, any equipment or part thereof which shall, within one year after delivery to the original purchaser, indicate upon our examination to have been defective. Our obligation is contingent upon proper use of Dynabrade tools in accordance with factory recommendations, instructions and safety practices. It shall not apply to equipment which has been subject to misuse, negligence, accident or tampering in any way so as to affect its normal performance. Normally wearable parts such as bearings, contact wheels, rotor blades, etc., are not covered under this warranty.

| Machine Number | Pad Dia. Inch (mm) | Length Inch (mm) | Height Inch (mm) | Machine Pound | Air Flow Rate SCFM (LPM) | Sound Level | Motor HP (W) | Motor RPM | Air Pressure PSI (Bars) |
|---|---|---|---|---|---|---|---|---|---|
| **10340 / 10341** | 3-1/2" (89) | 6" (152) | 3-3/4" (95) | 2.1 lbs. (1.0) | 16 (453) | 76 dBA | .24 (179) | 10,000 | 90 (6.2) |
| **10342 / 10343 / 10353** | 5" (127) | 6-1/2" (165) | 3-5/8" (92) | 2.1 lbs. (1.0) | 16 (453) | 77 dBA | .24 (179) | 10,000 | 90 (6.2) |
| **10344 / 10345 / 10354** | 6" (152) | 7" (178) | 3-1/2" (89) | 2.2 lbs. (1.0) | 16 (453) | 74 dBA | .24 (179) | 10,000 | 90 (6.2) |

Additional specifications: Air Inlet Thread 1/2" (13 mm) NPT • Hose Size 1/2" (13 mm)

# Motor Assembly/Disassembly Instructions - Wet Dynorbital® Supreme

**Important: Manufacturers warranty is void if tool is disassembled before warranty expires.**
A complete repair kit, part number **57098**, is available which includes special tools for correct disassembly/assembly of tool.

## To Disassemble:

1. Disconnect tool from power source.
2. Invert machine and secure in vice, using **57092** Collar (supplied in **57098** Repair Kit) or padded jaws.
3. Remove sanding pad with 26 mm open-end wrench (supplied with sander) and shroud or overskirt.
4. Insert **56058** Lock Ring Tool (supplied in **57098** Repair Kit) into corresponding tabs of lock ring and unscrew. Motor may now be lifted out for service. **Note:** To get it started use a 26 mm wrench for leverage .
5. Remove lock ring, washer, front ring and rear ring from motor.
6. Remove **95626** Snap Ring, upper motor may now be disassembled.
7. Remove the rear plate and the cylinder assembly by securing the cylinder in a earing separator gripped on the cylinder exhaust and extra pocket area. Push the motor shaft balancer through the bearing.
8. Remove the rotor, vanes and rotor key from the motor shaft balancer. Remove the front plate using a small (#2) arbor press. Support the edges of the front plate while pressing on the small end of the motor shaft balancer.
9. a.) If, during step 7, the front plate and **57088** Bearing remain together, press **57088** Bearing out of the front plate using **57091** Press Tool (supplied in **57098** Repair Kit) as shown in **Drawing 1.**

   b.) If, during step 7, front plate and **57088** Bearing remains on motor shaft balancer, it can be removed with a bearing separator.
10. Remove **01206** Bearing from the rear plate by using a bearing press tool.
11. Disassemble the balancer assembly as follows:

    a.) Place motor shaft assembly into a soft jaw vise. Using a thin screwdriver, pick out the end of **95631** Snap Ring and peel out. This will loosen the balancer assembly.

    b.) Screw the threaded portion of the **56056** Bearing Puller (supplied in **57098** Repair Kit) into the **57588** Balancer Shaft and heat the outside of the motor shaft balancer to approximately 200° F (approximately 10 seconds with a propane torch). Now, using the slider weight, pull the assembly out. Remove **96153** O-Ring from shaft balancer.

    c.) Press off **56052** Bearing with a bearing separator and remove v-ring seal and washer.
12. If during step 10, the **56052** Bearing remains in the motor shaft balancer, it can be removed by the heating the shaft balancer again and using either an inside bearing puller or a blind hole bearing puller.

## To Reassemble:

**Important:** Be certain parts are clean and in good repair before reassembling.

1. Assemble the balancer assembly as follows:

   a.) Install **95631** Snap Ring onto **57588** Balancer Shaft. Install **96154** V-Ring Seal with thin edge facing up. Be certain that seal is pressed all the way down into groove in balancer shaft.

   b.) Place a small amount of pneumatic tool oil on the thin edge of seal. Place **57589** Washer onto seal and center it.

   c.) Apply 1 drop of #271 Loctite® (or equivalent) and spread over several places around the inside diameter of the **56052** Bearing and the outside diameter of the **57588** Balancer Shaft.

   d.) Press fit **56052** Bearing with seal side toward hex of balancer shaft up to shaft step as shown in **Drawing 2**. This must be a firm press fit for proper retention of bearing. The washer must be centered so the edge of the v-ring seal is not pinched in the I.D. of the washer. If it is, a thin screw driver must be used to pry the edge out from the I.D. and onto the face of the washer.
2. Place motor shaft balancer in a soft jaw vise with large end up and place o-ring into second groove in shaft balancer.
3. Apply 1 drop of #271 Loctite® (or equivalent) and spread over several places around the inside diameter of the motor shaft balancer after the o-ring. Slide balancer assembly into motor shaft balancer until **56052** Bearing is firmly seated at bottom. Squeeze **95631** Snap Ring into groove in motor shaft balancer to complete the assembly. Remove from vise.
4. Press **57088** Bearing onto the motor shaft balancer down to the shoulder as shown in **Drawing 3**.
5. Press **57587** Front Bearing Plate onto **57088** Bearing as shown in **Drawing 4** and check for smooth rotation.
6. Place the **57090** Rotor and **56047** Rotor Key onto shaft balancer. Place the **56073** Vanes into the rotor slots. **Note:** Vanes should be lightly lubricated with Dynabrade Air Lube P/N **95842** (or equivalent) before installation.
7. Place **57058** Cylinder Assembly over rotor. The "short" line-up pin goes toward the Front Plate.
8. Place **57056** Rear Bearing Plate (with **01206** Rear Bearing pressed into place) over shaft and "long" end of line-up pin and press fit in place as shown in **Drawing 5.**
9. Place **95626** Snap Ring in groove.
10. Place **57054** Rear Ring over the rear plate and line-up pin. Turn the motor over and place **57055** Front Ring over the front plate making sure that the "legs and fingers" on the front and rear rings line-up. Also the small cut-outs on both rings should line-up with the square holes in the cylinder/endplate assembly. Place **96155** Washer and **57059** Lock Ring onto the front ring with 1 drop of pneumatic tool oil spread between the washer and lock ring.
11. Secure motor housing in vise, using **57092** Collar or padded jaws. Spread 2-3 drops of pneumatic tool oil around the housing bore for ease of insertion of motor assembly. Slide motor assembly into secured housing. **Note**: Be certain line-up pin enters the pocket in the bottom of the housing and the "legs" of the rings stay in line.
12. Tighten lock ring with **56058** Lock Ring Tool to 28 N•m/250 in. - lbs.). Attach shroud or overskirt and weight-mated sanding pad.

**Motor assembly is complete. Please allow 30 minutes for adhesives to cure before operating tool.**

(continued on next page)

**Drawing 1**

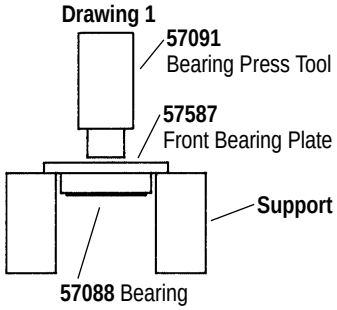


**Drawing 2**

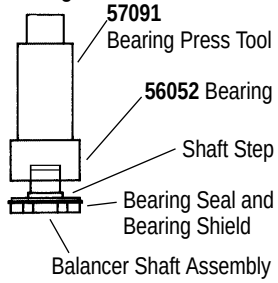


**Drawing 3**

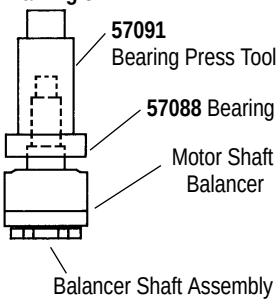


**Drawing 4**

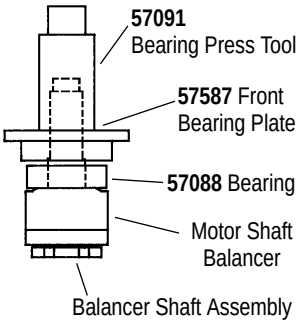


**Drawing 5**

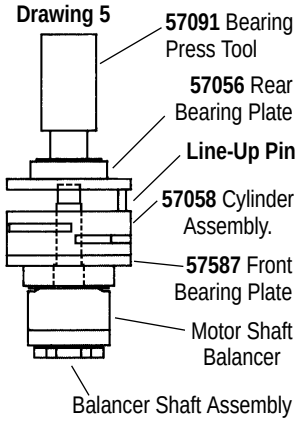

# Motor Assembly/Disassembly Instructions - Wet Dynorbital® Supreme

## Valve and Speed Regulator Assemblies:

1. Secure housing in vice using **57092** Collar or padded jaws.
2. Remove inlet bushing, **01468** Spring, hinge valve and **01464** Seal from housing.
3. Remove **95697** Snap Ring. Press the spread regulator and valve stem out of the housing. Remove the **01025** O-Rings (2).
4. Place new **01025** O-Rings (2) on the speed regulator and place in housing with valve stem. Install new **95967** Snap Ring.
5. Place new **01464** Seal in housing using tweezers or needle nose pliers. Place the tip valve into housing so that the pin goes through the valve stem hole. Place new **01468** Spring into housing so small end is towards tip valve.
6. Spread 1 drop of #271 Loctite® (or equivalent) around the threads of the first inlet bushing and tighten into housing to 23 N•m/200 in. - lbs.

**Note:** Motor should operate at between 9,500 and 10,000 RPM at 6.2 bar (90 PSI). RPM should be checked with a reed tachometer. Before operating, we recommend that 2-3 drops of Dynabrade Air Lube P/N **95842** (or equivalent) be placed directly into the air inlet with throttle lever depressed. Operate the machine for approximately 30 seconds before application to workpiece to determine if machine is working properly and safely and to allow lubricating oils to properly dispense through machine.

Loctite® is a registered trademark of the Loctite Corp.

# Random Orbital Sanding Pads

**Perfectly balanced and weight-mated to Dynorbital® Supreme Random Orbital Sander.**
**Premium Urethane** Resists Heat Build-Up — Available in Soft or Medium Density



Vinyl Face for PSA discs and Hook Face for reattachable scrim-backed discs.

**Rubber** with Vinyl Face for PSA Discs



**Rubber** with Vinyl Face for PSA Discs
"Post Pattern" for Enhanced Vacuum Pick-Up



No need to align vacuum holes! Saves time on disc changes.

**Rubber** with Hook Face "Long Nap" for Abrasive Impregnated Non-Woven Nylon Discs



3-1/2", 5" and 6" diameter disc pads have 5/16"-24 male threaded stud.
The 3-1/2" diameter discs, without holes, can be used on vacuum and non-vacuum 3-1/2" Dynorbital® Supreme sanders.

**Premium Urethane Disc Pad Part Numbers by Pad Diameter**

| Disc Pad Description | 31/2" | 5" | | 6" | |
|---|---|---|---|---|---|
| | No Holes | No Holes | Holes | No Holes | Holes |
| Soft Density/Vinyl Face for PSA Discs | 56097 | | | | |
| Soft Density/Low Profile/Vinyl Face for PSA Discs | | 56102 | 56100 | 56103 | 56101 |
| Soft Density/Hook Face "Short Nap" for Scrim-Backed Discs | 54311 | 56157 | 56155 | 56158 | 56156 |
| Medium Density/Vinyl Face for PSA Discs | 56098 | | | | |
| Medium Density/Low Profile/Vinyl Face for PSA Discs | | 56106 | 56104 | 56107 | 56105 |
| Medium Density/Hook Face "Short Nap" for Scrim-Backed Discs | 54313 | 54325 | 54326 | 54327 | 54328 |

**Rubber Disc Pad Part Numbers by Pad Diameter**

| Disc Pad Description | 31/2" | 5" | | 6" | |
|---|---|---|---|---|---|
| | No Holes | No Holes | Holes | No Holes | Holes |
| Medium Density/Vinyl Face for PSA Discs | | 50630 | 50631 | 50632 | 50633 |
| Medium Density/Post Pattern/Vinyl Face for PSA Discs | | | 50695 | | 50696 |
| Medium Density/Hook Face "Short Nap" for Scrim-Backed Discs | | | | | |
| Medium Density/Hook Face "Long Nap" for Non-woven Nylon Discs | | 50605 | 50607 | 50606 | 50610 |

Unit=10 Pads each. On 5" and 6" pads, no holes, refers to non-vacuum style sanding pads.



**96018 Motor Tune-Up Kit:**
Includes assorted parts to help maintain motor in tip-top shape.



**57098 Motor Repair Kit:**
Includes special tools for proper disassembly/assembly of the Wet Dynorbital Supreme.

DYNABRADE®

*DYNABRADE, INC.,* 8989 Sheridan Drive • Clarence, NY 14031-1490 • Phone: (716) 631-0100 • Fax: 716-631-2073 • International Fax: 716-631-2524
*DYNABRADE EUROPE S.àr.l.,* Zone Artisanale • L-5485 Wormeldange—Haut, Luxembourg • Telephone: 352 76 84 94 • Fax: 352 76 84 95

©DYNABRADE, INC., 1997

PRINTED IN USA