For Serial No. 09B1000G and Higher

AUTOMOTIVE

Parts Page Reorder No. APD13•03
Effective June, 2013

Dynorbital-Spirit®

12,000 RPM Air Powered Random Orbital Sander

Air Tool Manual – Safety, Operation and Maintenance

SAVE THIS DOCUMENT, EDUCATE ALL PERSONNEL

Model 21058

- **3/32" (2.5 mm) Dia. Orbit**
- **6" (152 mm) Diameter**
- **Self-Generared Vacuum**



FIND THE MOST CURRENT OFFERING OF SUPPORT DOCUMENTS AND ACCESSORIES @ WWW.DYNABRADE.COM

⚠ WARNING

Read and understand this tool manual before operating your air tool. Follow all safety rules for the protection of operating personnel as well as adjacent areas. Always operate, inspect and maintain this tool in accordance with the American National Standards Institute (ANSI) Safety Code for Portable Air Tools – B186.1. For additional safety information, refer to Safety Requirements for the Use, Care and Protection of Abrasive Wheels – ANSI B7.1, Code of Federal Regulation – CFR 29 Part 1910, European Committee for Standards (EN) Hand Held Non-Electric Power Tools – Safety Requirements and applicable State and Local Regulations.

SAFETY LEGEND



⚠ WARNING

Read and understand tool manual before work starts to reduce risk of injury to operator, visitors, and tool.

⚠ WARNING

Practice safety requirements. Work alert, have proper attire, and do not operate tools under the influence of alcohol or drugs.





⚠ WARNING

Eye protection must be worn at all times, eye protection to conform to ANSI Z87.1.

⚠ WARNING

Ear protection to be worn when exposure to sound, exceeds the limits of applicable Federal, State or local statues, ordinances and/or regulations.





⚠ WARNING

Respiratory protection to be used when exposed to contaminants that exceed the applicable threshold limit values required by law.

⚠ WARNING

Air line hazard, pressurized supply lines and flexible hoses can cause serious injury. Do not use damaged, frayed or deteriorated air hoses and fittings.



⚠ WARNING

Some dust created by sanding, grinding, drilling, and other construction activities contain chemicals known to cause cancer, birth defects or other reproductive harm. Some examples of these chemicals are:

- Lead from lead-based paints
- Crystalline silica from bricks and cement and other masonry products
- Arsenic and chromium from chemically treated lumber

Your risk from these exposures varies, depending on how often you do this type of work. To reduce your exposure to these chemicals: work in a well ventilated area, and work with approved safety equipment, such as those dust masks that are specially designed to filter out microscopic particles.

SAFETY INSTRUCTIONS

Carefully Read all instructions before operating or servicing any Dynabrade® Abrasive Power Tool.
Products offered by Dynabrade are not to be modified, converted or otherwise alerted from the original design without expressed written consent from Dynabrade, Inc.

Tool Intent: Dynorbital-Spirit® Random Orbital Sander is used for sanding and finishing a variety of materials including wood, metal, plastic, fiberglass, solid surfaces, composites, rubber, glass and stone.

Do Not Use Tool For Anything Other Than Its Intended Applications.

Warning: This power tool is not intended for use in potentially explosive atmospheres and is not insulated against contact with electrical power.

Training: Proper care, maintenance, and storage of your tool will maximize its performance.

- Employer's Responsibility – Provide Dynorbital-Spirit® operators with safety instructions and training for safe use of tools and accessories.

Accessory Selection:

- Abrasive/accessory RPM (speed) rating MUST be approved for AT LEAST the tool RPM rating.
- Before mounting an accessory, visually inspect for defects. Do not use defective accessories.
- Follow tool specifications before choosing size and type of accessory.
- Only use recommended fittings and air line sizes. Air supply hoses and air hose assemblies must have a minimum working pressure rating of 150 PSIG (10 bars, g) or 150 percent of the maximum pressure produced in the system, whichever is higher. (See Tool Machine Specifications Table.)

OPERATING INSTRUCTIONS

Warning: Always wear eye protection. Operator of tool is responsible for following: accepted eye, face, respiratory, hearing and body protection.

Caution: Hand, wrist and arm injury may result from repetitive work, motion and overexposure to vibration.

Warning: Be sure that any loose clothing, hair and all jewelry is properly restrained.

- Keep hand and clothing away from moving end of the air tool which has a potential hazard of cutting and severing.
- Install air fitting into inlet bushing of tool. Important: Secure inlet bushing of tool with a wrench before attempting to install the air fitting to avoid damaging valve body housing.

Warning: Regularly check free speed (RPM) of random orbital sander. The speed (RPM) is checked with the back-up pad securely fastened without any type of sanding accessory attached to the back-up pad. The air pressure must be set to 90 PSIG with the tool running. Checking the RPM requires either a strobe or magnetic tachometer. This procedure is required after all tool repairs and whenever a tool is issued for use. If tool is operating at a higher speed than the RPM marked on the tool housing, or operating improperly, the tool must be serviced and corrected before use.

Warning: Tool RPM must never exceed abrasive/accessory RPM rating. Check accessory manufacturer for details on maximum operating speed or special mounting instructions.

Warning: Do not free spin the tool away from the work surface with an abrasive sanding disc attached. The sanding disc may detach from the back-up pad causing injury.

Warning: Always start the tool with the sanding abrasive against the work. Stop the air flow to the tool as it is removed from the work.

- With power source connected at the air tool relieve hose of air pressure and disconnect tool from air supply when changing recommended accessories.
- Connect air tool to power source. Be careful NOT to depress throttle lever in the process.
  Do not expose air tool to inlet pressure above 90 PSIG or (6.2 Bars).

Caution: After installing the accessory, before testing or use and/or after reassembling tool, the tool must be started at a reduced speed to check for good balance. Gradually increase tool speed. DO NOT USE if tool vibration is excessive. Correct cause, and retest to insure safe operation.

Warning: Use only appropriately sized abrasive sanding discs properly secured and centered to the backing pad provided with the air sander.

- DO NOT USE grinding wheels or cutting-off wheels.
- Make sure that work area is uncluttered, and visitors are at a safe range from the tools and debris.

Warning: Potentially explosive atmospheres can be caused by dust and fumes resulting from sanding or grinding. Always use dust extraction or suppression systems which are suitable for the material being processed.

- Proceed with caution in unfamiliar surroundings. Hidden hazards may exist, such as electricity or other utility lines.
- Use only Dynabrade weight-mated pads to maintain low vibration levels.
- Use a vise or clamping device to hold work piece firmly in place.
- Work may generate hazardous dust.
- Always be aware of bystanders in work areas.
- Do not apply excessive force on tool or apply “rough” treatment to it.
- Always work with a firm footing, posture and proper lighting.
- Release the throttle lever in case of an interruption of the energy supply.
- Ensure that sparks and debris resulting from work do not create a hazard such as fire or explosion.
- This tool is rear exhaust. Exhaust may contain lubricants, vane material, bearing grease, and other materials flushed through the tool.

Speed Regulator Flow Control

Maximum Flow: Turn Clockwise.
Minimum Flow: Turn Counter-clockwise.

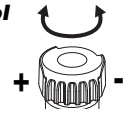

Report to your supervisor any condition of the tool, accessories, or operation you consider unsafe.

Air System

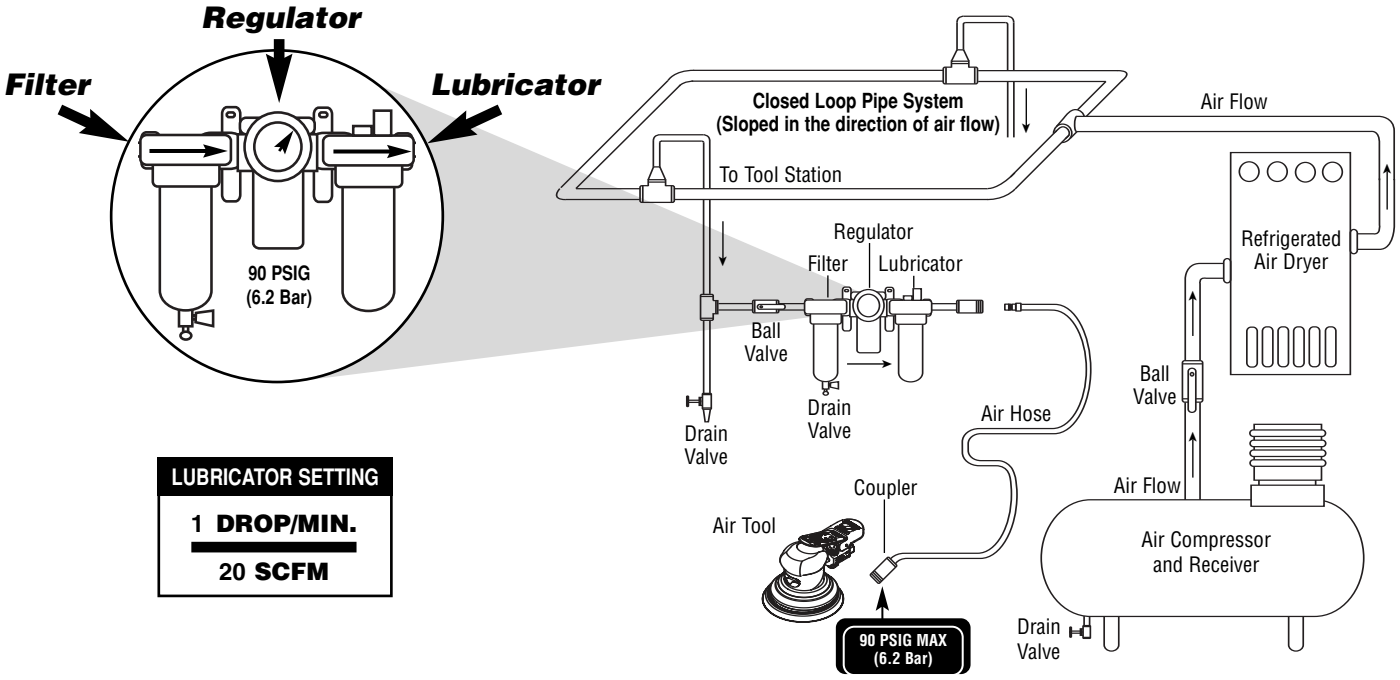

- Dynabrade Air Power Tools are designed to operate at 90 PSIG (6.2 Bar/620 kPa) maximum air pressure at the tool inlet, when the tool is running. Use recommended regulator to control air pressure.
- Ideally the air supply should be free of moisture. To facilitate removing moisture from air supply, the installation of a refrigerated air dryer after the compressor and the use of drain valves at each tool station is recommended.

Maintenance Instructions

Important: To keep tool safe a Preventative Maintenance Program is recommended whenever portable power tools are used.

- Use only genuine Dynabrade replacement parts to ensure quality. To order replacement parts, specify **Model#**, **Serial#** and **RPM** of your air tool.
- It is strongly recommended that all Dynabrade rotary vane air tools be used with a Filter-Regulator-Lubricator to minimize the possibility of misuse due to unclean air, wet air or insufficient lubrication. Dynabrade recommends the following: **10681** Air Filter-Regulator-Lubricator (FRL) – Provides accurate air pressure regulation and two stage filtration of water contaminates.
- Dynabrade recommends one drop of air lube per minute for each 20 SCFM (example: if the tool specification states 40 SCFM, set the drip rate on the filter-lubricator to 2 drops per minute). Dynabrade Air Lube (P/N **95842**: 1 pt 473 ml) is recommended.

Routine Preventative Maintenance: Check free speed of Dynorbital-Spirit® regularly using a strobe or magnetic tachometer without abrasive accessory attached with 90 PSIG at inlet while tool is running. Always check tool speed after any maintenance or repair. If tool is operating at a higher RPM (speed) than marked on the housing, or operating improperly, the tool must be corrected before use.

- Mineral spirits are recommended when cleaning the tool and parts. Do not clean tool or parts with any solvents or oils containing acids, esters, ketones, chlorinated hydrocarbons or nitro carbons.
- DO NOT clean or maintain tools with chemicals that have a low flash point (example: WD-40®).
- A Drop-In Motor and Tune-Up Kit are available, see specific kit number on page 7.
- Air tool stampings must be kept legible at all times, if not, reorder and replace. User is responsible for maintaining specification information i.e.: Model #, S/N, and RPM.
- Blow air supply hose out prior to initial use.
- Visually inspect air hoses and fittings for frays, visible damage and signs of deterioration. Replace damaged or worn components.
- Refer to Dynabrade's Warning/Safety Operating Instructions Tag (Reorder No. **95903**) for safety information.

After maintenance is performed on tool, add a few drops of Dynabrade Air Lube (P/N **95842**) to the air line and start the tool a few times to lubricate air motor. Check for excessive tool vibration.

Handling and Storage:

- Protect tool inlet from debris (See Notice Below).
- DO NOT carry tool by air hose.
- Protect abrasive accessories from exposure to water, solvents, high humidity, freezing temperature and extreme temperature changes.
- Store accessories in protective racks or compartments to prevent damage.

Notice

All Dynabrade motors use the highest quality parts and materials available and are machined to exacting tolerances. The failure of quality pneumatic motors can most often be traced to an unclean air supply or the lack of lubrication. Air pressure easily forces dirt or water contained in the air supply into motor bearings causing early failure. It often scores the cylinder walls and the rotor blades resulting in limited efficiency and power. Our warranty obligation is contingent upon proper use of our tools and cannot apply to equipment which has been subjected to misuse such as unclean air, wet air or a lack of lubrication during the use of this tool.

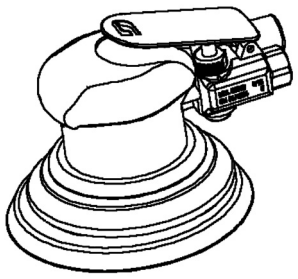

Lifetime Warranty

All Dynabrade portable pneumatic power tools are rigorously inspected and performance tested in our factory before shipping to our customers. If a Dynabrade tool develops a performance problem and an inherent defect is found during normal use and service, Dynabrade will warrant this tool against defects in workmanship and materials for the lifetime of the tool. Upon examination and review at our factory, Dynabrade shall confirm that the tool qualifies for warranty status, and will repair or replace the tool at no charge to the customer. Normally wearable parts and products are NOT covered under this warranty. Uncovered items include bearings, contact wheels, rotor blades, regulators, valve stems, levers, shrouds, guards, O-rings, seals, gaskets and other wearable parts. Dynabrade's warranty policy is contingent upon proper use of our tools in accordance with factory recommendations, instructions and safety practices. It shall not apply to equipment that has been subjected to misuse, negligence, accident or tampering in any way so as to affect its normal performance. To activate lifetime warranty, customer must register each tool at www.dynabrade.com. Dynabrade will not honor lifetime warranty on unregistered tools. A one-year warranty will be honored on all unregistered portable pneumatic power tools. Lifetime warranty applies only to portable pneumatic tools manufactured by Dynabrade, Inc. in the USA. Lifetime warranty applies only to the original tool owner; warranty is non-transferable.

Dynorbital-Spirit®
Complete Assembly

Index Key		
No.	**Part #**	**Description**
1	**54328**	6" Hook-Face Pad
2	**N/A**	Non-Vacuum Shroud
3	**69363**	Vacuum Shroud
4	**57069**	Balancer Shaft
5	**95630**	Snap Ring
6	**59084**	V-Seal
7	**56052**	Bearing
8	**59067**	Motor Shaft Balancer
9	**56047**	Key
10	**59058**	Lock Ring
11	**59057**	"Top Hat" Seal
12	**59083**	Felt
13	**58368**	Bearing (2)
14	**59076**	Front Bearing Plate
15	**57113**	Rotor/Blade Set
16	**59051**	Cylinder
17	**01024**	Seal
18	**59077**	Rear Bearing Plate
19	**59458**	Drop-In Motor Assembly
20	**21185**	Housing
21	**69357**	Throttle Lever - 3/32"
22	**94590**	Pin
23	**57041**	Comfort Platform
24	**98459**	O-Ring
25	**58363**	Valve Stem
26	**59075**	Speed Regulator
27	**01025**	O-Ring (2)
28	**95697**	Retaining Ring
29	**01464**	Seal
30	**58365**	Tip Valve
31	**01468**	Spring
32	**01494**	Inlet Bushing

KEY

- O — Oil: **O_1 = Air Lube**
- A — Adhesive: **A_2 = Loctite #271**, **A_8 = Loctite #567**
- T — Torque: **N•m x 8.85 = In. - lbs.**

Always follow adhesive manufacturers cleaning and priming recommendations.

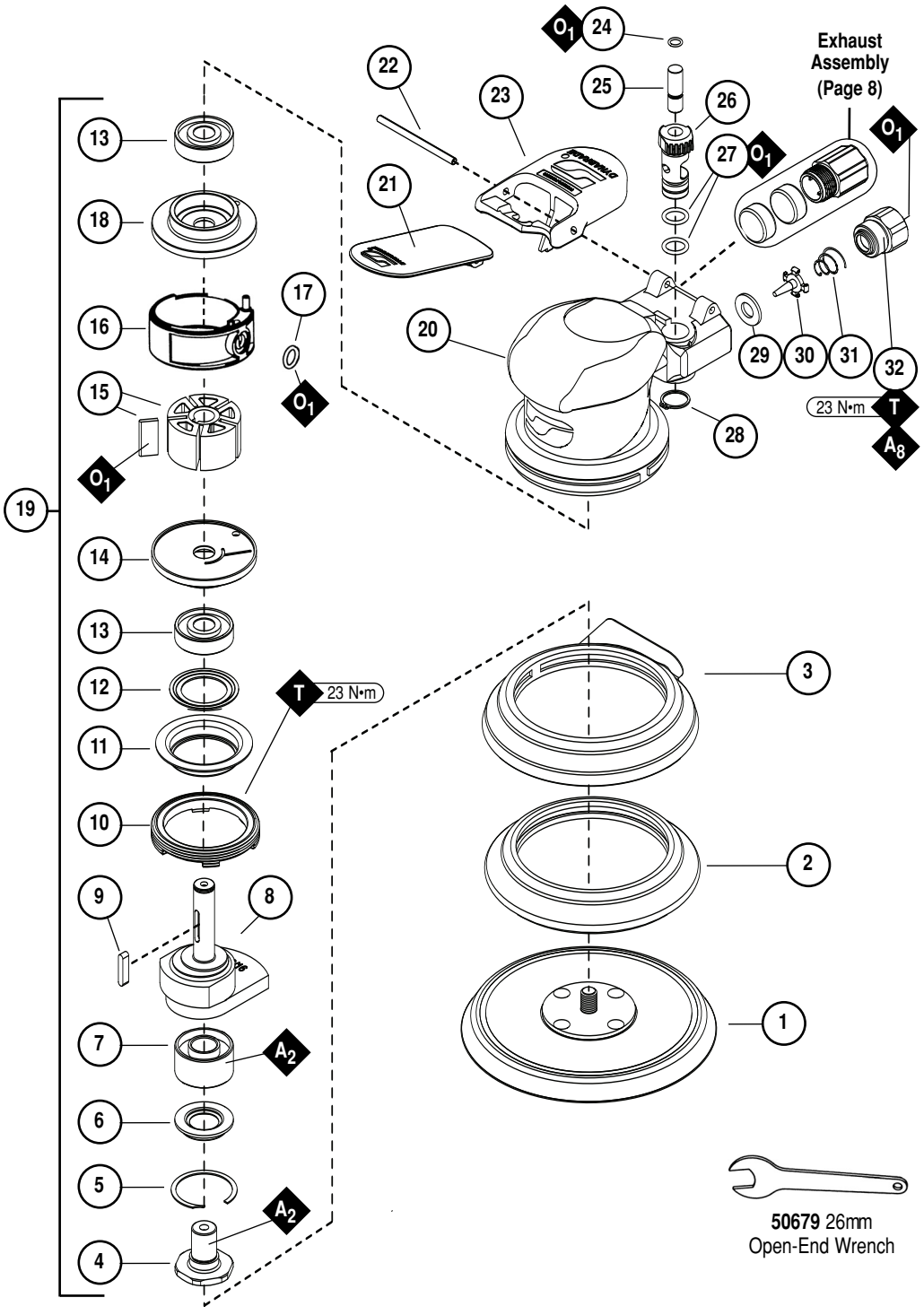

50679 26mm
Open-End Wrench

Motor Assembly/Disassembly Instructions - Dynorbital-Spirit®

Important: Manufacturers warranty is void if tool is disassembled before warranty expires.
A Full Service Repair Kit P/N **57098**, is available which includes special repair tools for correct disassembly/assembly of the sander.

To Disassemble:

1. Disconnect sander from air supply.
2. Invert the sander, and place the **57092** Repair Collar (supplied in the **57098** Full Service Repair Kit) around the housing and secure in a vise. Padding can be used on the vise jaws to protect the housing. **Important:** Do not over tighten the sander in the vise. If the sander is held too tight the removal of the lock ring and air motor will be difficult.
3. Remove back-up pad with the **50679** 26mm Open-end Wrench (supplied with the sander).
4. Insert **56058** Lock Ring Tool (supplied in **57098** Full Service Repair Kit) into the corresponding tabs of lock ring. Loosen the **59058** Lock Ring turning it counterclockwise.
5. Remove the **59058** Lock Ring from the air motor assembly (3/32" and 3/16" dia. orbits only).
6. Remove **98463** Retaining Ring from motor assembly.
7. Fasten a 2 in. bearing separator (P/N **96346** available) around the **59051** Cylinder just below the **59077** Rear Bearing Plate. Place the air motor assembly in a #2 arbor press (P/N **96232** available) so that the separator is resting on the table of the arbor press and with the balancer pointing down.
8. Use a flat nose 3/16" dia. drive punch as a press tool. Place it against the small end of the motor shaft balancer and push the shaft out of the upper **58368** Bearing.
9. Remove the rotor, vanes and rotor key from the motor shaft balancer.
10. Again fasten the 2 in. bearing separator between **58368** Bearing and the top of the balancer. Rest the separator on the table of the arbor press and push the motor shaft balancer out of the **58368** Bearing. Remove **59057** "Top Hat" Seal and **59083** Felt from **59076** Front Bearing Plate.
11. Disassemble the balancer assembly as follows:
    - **a.)** Place motor shaft balancer assembly into a soft jaw vise. Using a thin screwdriver, pick out the end of **95630** Snap Ring and remove. This will loosen the balancer assembly.
    - **b.)** Screw the threaded portion of the **56056** Bearing Puller (supplied in **57098** Repair Kit) into the **57069** Balancer Shaft and heat the outside of the motor shaft balancer to approximately 200° F (approximately 10 seconds with a propane torch). Now, using the slider weight, pull the assembly out.
    - **c.)** Press off **56052** Bearing with a bearing separator and arbor press, remove **59084** V-Seal.
12. If during step 11, the **56052** Bearing remains in the motor shaft balancer, it can be removed by the heating the shaft balancer again and using either an inside bearing puller or a blind hole bearing puller.

To Assemble:

Important: Clean and inspect all parts for defects before assembling.

1. Assemble the balancer assembly as follows:
    - **a.)** Install **59084** V-Seal onto the balancer shaft. Install with flexible lip of seal facing hex of balancer shaft. Be certain seal is pressed completely over shaft step. See **Drawing 1**.
    - **b.)** Install **95360** Snap Ring between flange of **59084** V-Seal and hex of balancer shaft.
    - **c.)** Apply 1 drop of #271 Loctite® (or equivalent) and spread over several places around inside diameter of **56052** Bearing and the outside diameter of the **57069** Balancer Shaft.
    - **d.)** Use the **57091** Bearing Press Tool to press **56052** Bearing with seal side toward hex of balancer shaft up to shaft step as shown in **Drawing 1**. This is a firm press fit for proper retention of bearing.
2. Place the motor shaft balancer in a soft aluminum or bronze jaw vise with large end pointing up.
3. Apply 1 drop of #271 Loctite® (or equivalent) and spread over several places around the outside diameter of the **56052** Bearing and slide balancer assembly into the motor shaft balancer until **56052** Bearing is firmly seated at bottom. Squeeze **95630** Snap Ring into groove in motor shaft balancer to complete the assembly. Remove from vise. Place **59058** Lock Ring onto the motor shaft balancer (3/8" orbit models only).
4. Place the **59083** Felt into the **59057** "Top Hat" Seal.
5. Install the **59076** Front Bearing Plate onto the motor shaft balancer, fitting it to the bearing, felt, and "Top Hat" Seal as is shown in **Drawing 4**.

(continued on next page)

Diagrams

Drawing 1

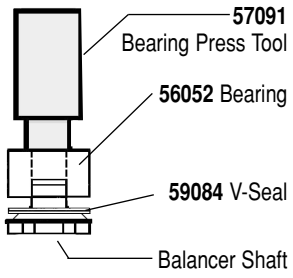

Drawing 2

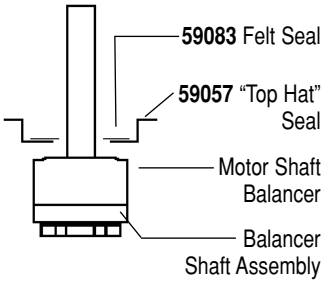

Drawing 3

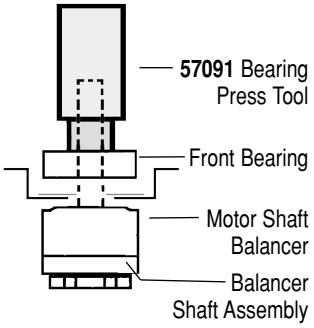

Drawing 4

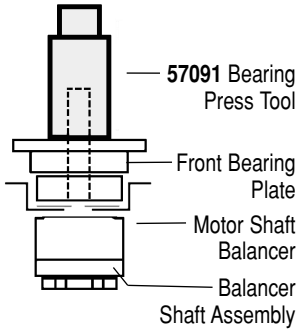

To Assemble (Continued):

6. Install the felt and the "Top Hat" Seal onto the motor shaft balancer so that they are centered as is shown in **Drawing 2**.
7. Use the small end of the **57091** Bearing Press Tool and the **96232** Arbor Press to install the **58368** Bearing onto the motor shaft balancer as shown in **Drawing 3**.
8. Install the rotor key and the rotor onto the motor shaft balancer.
9. Lubricate the **56073** Vanes with the **95842** Dynabrade Air Lube (10W/NR or equivalent) and install them into the rotor.
10. Install the **59051** Cylinder so that the short line-up pin fits into the front bearing plate.
11. Install the **58368** Bearing into the **59077** Rear Bearing Plate.
12. Use the small end of the **57091** Bearing Press Tool and the arbor press to install the rear bearing/plate onto the motor shaft balancer as is shown in **Drawing 5**. Press the bearing/plate down until it touches the cylinder. Check the fit between the bearing plates and cylinder. Grasp the outer diameter of the bearing plates, one in each hand. Twist the plates back and forth. It is important to achieve a snug fit between the bearing plates and the cylinder. A snug fit will trap the cylinder while still allowing it to be twisted back and forth. A loose fit will not achieve proper preload of the motor bearings.
13. Install the **01024** Seal into the cylinder and apply a small amount of the Dynabrade Air Lube onto the o-ring.
14. Slip **59058** Lock Ring over the counter weight of the 3/32" and the 3/16" orbit sanders.
15. Use mark on the edge of the motor opening to identify the location of the line-up notch on the inside of the housing.
16. Install the motor assembly into the housing. Be certain that the line-up pin enters the notch in the housing.
17. Use the **57092** Collar to carefully hold the tool in a vise so that the counter balance is pointing up.
18. Use the **56058** Lock Ring Tool to tighten the **59058** Lock Ring by turning it clockwise. (Torque to 23 N•m/300 in.- lbs.)
19. Use the 26mm open-end wrench to install a weight-mated back-up pad.

Valve and Speed Regulator Assemblies:

1. Secure housing in vice using **57092** Collar or padded jaws.
2. Remove inlet bushing, **01468** Spring, **58365** Tip Valve and **01464** Seal from housing. Remove **94590** Pin from housing, lever and comfort platform.
3. Remove **95697** Snap Ring. Press the speed regulator and valve stem out of the housing. Remove the **01025** O-Rings (2) and **98459** O-Ring.
4. Place new **01025** O-Rings (2) on the speed regulator and a new **98459** O-Ring on the valve stem. Then place in housing with valve stem. Install new **95967** Snap Ring. Apply a small amount of pneumatic tool oil to valve o-rings.
5. Place new **01464** Seal in housing. Using tweezers or needle nose pliers, place the tip valve into housing so that the tip valve goes under the valve stem. Place new **01468** Spring into housing so small end is towards tip valve.
6. Apply a small amount of #567 Loctite® (or equivalent) around the threads of the first inlet bushing and tighten into housing to 23 N•m/200 in.- lbs.
7. Install lever and comfort platform on housing with **94590** Pin centered on housing.

Note: Motor should operate at between 11,000 and 12,000 RPM at 6.2 bar (90 PSIG). RPM should be checked with a tachometer. Before operating, we recommend that 2-3 drops of Dynabrade Air Lube P/N **95842** (or equivalent) be placed directly into the air inlet with throttle lever depressed. Operate the machine for approximately 30 seconds before application to workpiece to determine if machine is working properly and safely and to allow lubricating oils to properly dispense through machine.

Loctite® is a registered trademark of the Loctite Corp.

Disc Pad Change:

1. Insert **50679** Wrench on flats of **57069** Balancer Shaft and twist off back-up pad by hand.
2. With wrench still in place, hand tighten new pad on tool.
3. No need to remove shroud or overskirt.

Required Weight of Pads:

3" Models — Use pad weighing 75g.
3-1/2" Models — Use pad weighing 80g.
5" Models — Use pad weighing 100g.
6" Models — Use pad weighing 130g.

Drawing 5

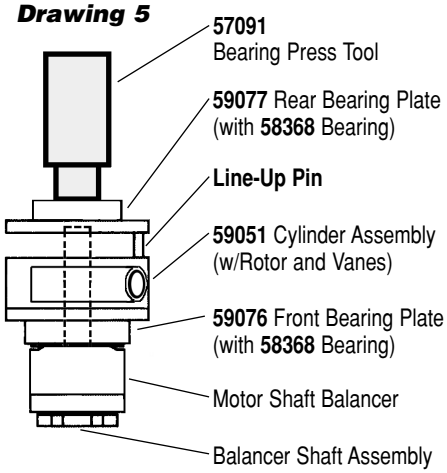

Preventative Maintenance Schedule

For Dynorbital-Spirit®

This service chart is published as a guide to expectant life of component parts. The replacement levels are based on average tool usage over one year. Dynabrade Inc. considers one year usage to be 1,000 hours.

Parts Common to all Models:

Index #	Part Number	Description	Number Required	High Wear 100%	Medium Wear 70%	Low Wear 30%	Non-Wear 10%
1	**54328**	Back-Up Pad	1				**X**
2	**N/A**	Lip-Seal Shroud	–				
3	**57089**	Vacuum Shroud	1				**X**
4	**57069**	Balancer Shaft	1				**X**
5	**95630**	Snap Ring	1			**L**	
6	**59084**	V-Seal	1		**T**		
7	**56052**	Bearing	1		**T**		
8	**59067**	Motor Shaft Balancer	1				**X**
9	**56047**	Key	1		**T**		
10	**59058**	Lock Ring	1			**X**	
11	**59057**	"Top Hat" Seal	1		**T**		
12	**59083**	Felt	1		**T**		
13	**58368**	Bearing	2		**T**		
14	**59076**	Front Bearing Plate	1			**X**	
15	**57113**	Rotor/Blade Set	1	**T**			
16	**59051**	Cylinder	1			**X**	
17	**01024**	Seal	1		**T**		
18	**59077**	Rear Bearing Plate	1			**X**	
19	**21185**	Housing	1				**X**
20	**69357**	Throttle Lever	1			**X**	
21	**94590**	Pin	1		**T**		
22	**57041**	Comfort Platform	1			**X**	
23	**98459**	O-Ring	1		**T**		
24	**58363**	Valve Stem	1		**T**		
25	**59075**	Speed Regulator	1			**X**	
26	**01025**	O-Ring	2		**T**		
27	**95697**	Retaining Ring	1		**T**		
28	**01464**	Seal	1		**T**		
29	**58365**	Tip Valve	1		**T**		
30	**01468**	Spring	1		**T**		
31	**01494**	Inlet Bushing	1				**X**
Machine Exhaust Parts							
1	**69364**	Shroud Adapter	1			**X**	
2	**57083**	Vacuum Adapter	1			**X**	
3	**96197**	Dowel Pin	1			**L**	
4	**57066**	Muffler Body	1			**X**	
5	**95526**	O-Ring	1		**T**		
6	**59088**	Vacuum Nozzle	1			**D**	
7	**57067**	Vacuum Tube	1			**X**	

LEGEND	
T	Included in Tune-Up Kit.
X	Type of wear, no other comments apply.
L	Easily lost. Care during assembly/disassembly.
D	Easily damaged during assembly/disassembly.



96510 Tune-Up Kit

- Tune-Up Kit contains high wear and medium wear parts.



Drop-in Motor Assembly

Orbit	6"
3/32"	59458

Drop-in Motor (10 Pack)
59478 – 6" Dia., 3/32" Orbit



59459 Drop-in Motor Repair Kit:
Includes special tools for proper disassembly/assembly of the Dynorbital-Spirit® drop-in motor.
Includes: **57092** Repair Collar
56058 Lock Ring Wrench



57098 Full Service Repair Kit:
Includes special tools for proper disassembly/assembly of the Dynorbital-Spirit®.
Includes: **57092** Repair Collar
56058 Lock Ring Wrench
56056 Bearing Puller
57091 Bearing Press Tool
57099 Bearing Puller
96034 12mm Hex Wrench

Machine Specifications

Model	Speed	Power	Sound	Orbit Dia.	Air Consumption	Pad Size	Weight	Length
21058	12,000 RPM	.25 hp (186 W)	81 db(A)	3/32" (2.5 mm)	14 SCFM (396 LPM)	6" Dia.	1.6 lb. (0.7 kg)	9" (229 mm)

Additional Specifications: Air Inlet Thread 1/4" NPT • Hose I.D. 1/4" (6 mm)
Sound Level is the pressure measurement according to the method outlined in ISO regulation ISO-15744

Overskirt Shroud



Overskirt Shroud
Protects pad edges when working near workpiece sides; maximizes dust pick-up on vacuum models.
Part No. 57087: 6" Diameter

Exhaust Assembly

Self-Generated Vacuum

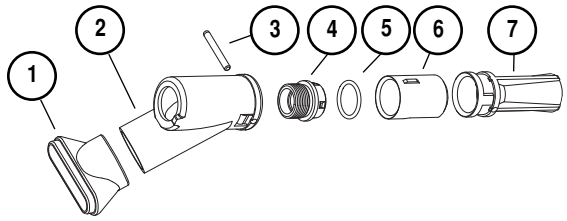

Index Key					
No.	Part #	Description	No.	Part #	Description
1	**69364**	Shroud Adapter	5	**95526**	O-Ring
2	**57083**	Vacuum Adapter	6	**59088**	Vac Nozzle
3	**96197**	Dowel Pin	7	**57067**	Vac Tube
4	**57066**	Muffler Body			

Optional: 30 quantity Muffler Insert available, P/N **56054**.

Reference Contact Information

1. **American National Standards Institute – ANSI**
   25 West 43rd Street
   Forth Floor
   New York, NY 10036
   Tel: 1 (212) 642-4900
   Fax: 1 (212) 398-0023

2. **Government Printing Office – GPO**
   Superintendent of Documents
   Attn. New Orders
   P.O. Box 371954
   Pittsburgh, PA 15250-7954
   Tel: 1 (202) 512-1803

3. **European Committee for Standardization**
   Rue de Stassart 36
   B - 1050 Brussels, Belgium

Visit Our Web Site: www.dynabrade.com

Email: Customer.Service@Dynabrade.com

DYNABRADE®

DYNABRADE, INC., 8989 Sheridan Drive • Clarence, NY 14031-1490 • Phone: (716) 631-0100 • Fax: 716-631-2073 • International Fax: 716-631-2524
DYNABRADE EUROPE S.àr.l., Zone Artisanale • L-5485 Wormeldange—Haut, Luxembourg • Telephone: 352 76 84 94 1 • Fax: 352 76 84 95 1

©DYNABRADE, INC., 2013