Models:
10400 - Non-Vac
10401 - Vac-Ready
10402 - Basic Vac
10403 - Deluxe Vac
10404 - Central Vac-Ready

AUTOMOTIVE

Parts Page Reorder No. APD11.03
Effective August, 2011
Supersedes APD97•14

Dynaline Sander

For Serial Number 5l3366 and Higher. Palm-Style, Air Powered, 2,400 SPM

⚠WARNING **Always operate, inspect and maintain this tool in accordance with the Safety Code for portable air tools (ANSI B186.1) and any other applicable safety codes and regulations. Please refer to Dynabrade's Warning/Safety Operating Instructions for more complete safety information.**

Index Key

No.	Part #	Description
1	**57429**	Felt Seal (4)
2	**95885**	Screw (2)
3	**01211**	Lock Washer (2)
4	**Slide Board**	
	57433	Non-Vacuum
	57432	Vacuum
5	**57431**	Transfer Pinion (2)
6	**57427**	Slider Housing Assembly (2) (Incl. **57429** Felt Seal)
7	**95641**	Nut (2)
8	**95642**	Screw (2)
9	**57434**	Vac Adapter (Vac Only)
10	**57445**	Needle Bearing
11	**57430**	Cam Assembly
12*	**96027**	Screw (4)
13*	**57439**	Rail (2)
14*	**57438**	Counter Weight
15	**01139**	Bearing (3)
16	**95593**	Set Screw
17	**54467**	Retaining Ring
18	**54468**	Ring Gear
19	**54465**	Planetary Carrier
20	**06213**	Gears (2)
21	**54475**	Shaft (2)
22	**07146**	Packing
23	**57059**	Lock Ring
24	**95973**	Washer
25	**57055**	Front Ring
26	**57437**	Front Bearing Plate
27	**56047**	Rotor Key
28	**54470**	Rotor Pinion
29	**57113**	Rotor/Blade Set
30	**57058**	Cylinder Assembly (Incl. **95971** Line-Up Pin)
31	**95971**	Line-Up Pin
32	**57056**	Rear Bearing Plate
33	**01206**	Bearing
34	**57054**	Rear Ring
35	**94590**	Pin
36	**57041**	Comfort Platform
37	**57441**	Lever
38	**95697**	Retaining Ring
39	**01025**	O-Ring (2)
40	**01477**	Valve Stem
41	**57064**	Speed Regulator or
	57053	Recessed Speed Reg.
42	**01464**	Seal
43	**01472**	Tip Valve
44	**01468**	Spring
45	**01494**	Inlet Bushing

KEY

- **O** Oil: **O_1 = Air Lube**
- **A** Adhesive: **A_2 = Loctite #271**, **A_8 = Loctite #567**
- **T** Torque: **N•m x 8.85 = In. - lbs.**
- **G** Grease: **G_1 = Lubriplate 630AA**

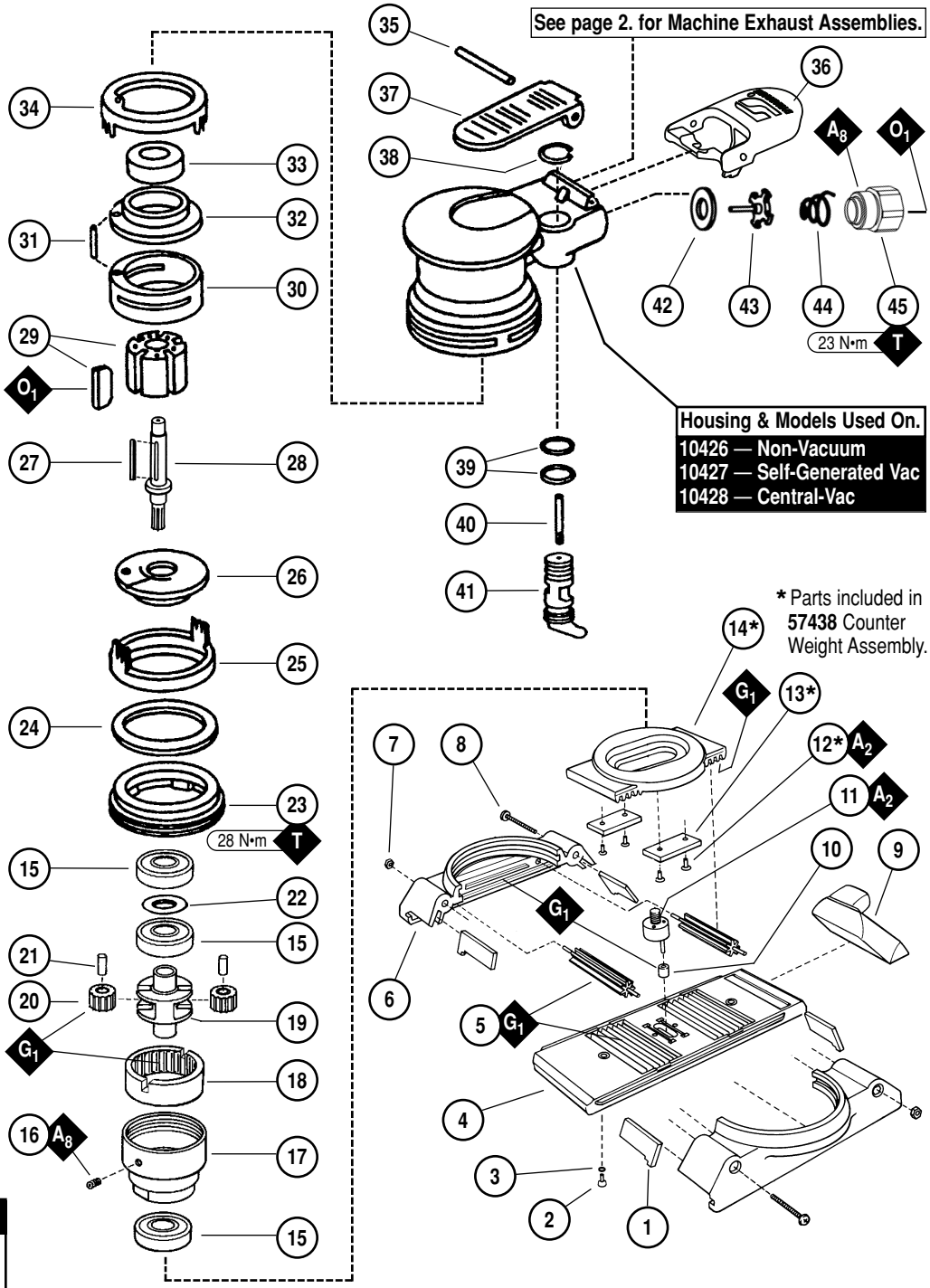

Note: To order replacement parts specify the model and serial number of your machine.

Machine Exhaust Assemblies

Non-Vacuum/Machine Exhaust

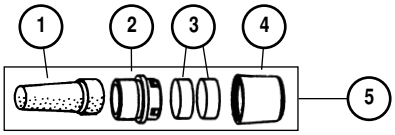

Self Generated Vacuum (Vac-Ready) / Machine Exhaust

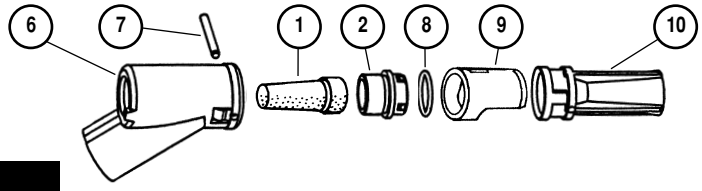

Central Vacuum/Machine Exhaust

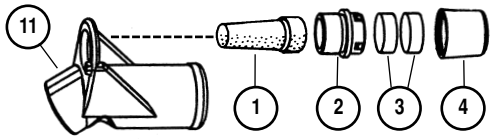

Index Key		
No.	**Part #**	**Description**
1	**57065**	Cone Plug
2	**57066**	Muffler Cap
3	**56027**	Muffler Insert (2)
4	**56028**	Muffler Cap
5	**57124**	Muffler Assembly
6	**57083**	Vacuum Adapter
7	**96197**	Dowel Pin
8	**95526**	O-Ring
9	**59088**	Vac Nozzle
10	**57067**	Vac Tube
11	**57093**	Vacuum Adapter

Important Operating, Maintenance and Safety Instructions

Carefully read all instructions before operating or servicing any Dynabrade® Abrasive Power Tool.
Warning: Hand, wrist and arm injury may result from repetitive work motion and overexposure to vibration.
Important: All Dynabrade rotary vane air tools must be used with a Filter-Regulator-Lubricator to maintain all warranties.

Operating Instructions:

Warning: Eye, face, respiratory, sound and body protection must be worn while operating power tools. Failure to do so may result in serious injury or death. Follow safety procedures posted in workplace.

1. With power source disconnected from tool, securely fasten abrasive/accessory on tool.
2. Connect power source to tool. Be careful **not** to depress throttle lever in the process.
3. Check tool speed with tachometer. If tool is operating at a higher speed than the SPM marked on the tool or operating improperly, the tool should be serviced to correct the cause before use.

Maintenance Instructions:

Products offered by Dynabrade should not be converted or otherwise altered from original design without expressed written consent from Dynabrade, Inc.

1. All Dynabrade rotary vane air motors should be lubricated. Dynabrade recommends one drop of air lube per minute for each 20 SCFM (example: if the tool specifications state 40 SCFM, set the drip rate of your filter-lubricator at 2 drops per minute).
   Dynabrade Air Lube (P/N **95842**: 1 pt. 473 ml.) is recommended.
2. Mineral spirits are recommended when cleaning tool. Do not clean tool with any solvents or oils containing concentrated acids, esters, ketones chlorinated hydrocarbons or nitro hydrocarbons.
3. An Air Line Filter-Regulator-Lubricator must be used with this air tool to maintain all warranties. Dynabrade recommends the following: **10681** Air Line Filter-Regulator-Lubricator — Provides accurate air pressure regulation, two-stage filtration of water contaminants and micro-mist lubrication of pneumatic components. Operates 55 SCFM @ 100 PSIG has 1/2" NPT female ports.
4. Frequent drainage of water traps in air lines is recommended.
5. Some silencers on air tools may clog with use. Clean and replace as required.
6. A Motor Tune-Up Kit (P/N **96107**) is available which includes assorted parts to help maintain and repair motor.

Safety Instructions:

- **Warning:** Eye, face, respiratory, sound and body protection must be worn while operating power tools. Failure to do so may result in serious injury or death. Follow safety procedures posted in workplace.
- **Important:** User of tool is responsible for following accepted safety codes such as those published by the American National Standards Institute (ANSI).
- Tool SPM must never exceed abrasive/sanding pad SPM rating, regardless of tool capacity.
- Operate machine for 30 seconds before application to workpiece to determine if machine is safely performing before work begins.
- Always disconnect power supply before changing abrasive or making machine adjustments.
- Inspect abrasives and sanding pads for damage or defects prior to and during operation of tool.
- Please refer to Dynabrade's Warning/Safety Operating Instructions Tag (Reorder No. **95903**) for more complete safety information.
- **Warning:** Hand, wrist and arm injury may result from repetitive work, motion and overexposure to vibration.

Lifetime Warranty

All Dynabrade portable pneumatic power tools are rigorously inspected and performance tested in our factory before shipping to our customers. If a Dynabrade tool develops a performance problem and an inherent defect is found during normal use and service, Dynabrade will warrant this tool against defects in workmanship and materials for the lifetime of the tool. Upon examination and review at our factory, Dynabrade shall confirm that the tool qualifies for warranty status, and will repair or replace the tool at no charge to the customer. Normally wearable parts and products are NOT covered under this warranty. Uncovered items include bearings, contact wheels, rotor blades, regulators, valve stems, levers, shrouds, guards, O-rings, seals, gaskets and other wearable parts. Dynabrade's warranty policy is contingent upon proper use of our tools in accordance with factory recommendations, instructions and safety practices. It shall not apply to equipment that has been subjected to misuse, negligence, accident or tampering in any way so as to affect its normal performance. To activate lifetime warranty, customer must register each tool at www.dynabrade.com. Dynabrade will not honor lifetime warranty on unregistered tools. A one-year warranty will be honored on all unregistered portable pneumatic power tools. Lifetime warranty applies only to portable pneumatic tools manufactured by Dynabrade, Inc. in the USA. Lifetime warranty applies only to the original tool owner; warranty is non-transferable.

Disassembly/Assembly Instructions – Dynaline Sander

Important: Manufacturers warranty is void if tool is disassembled before warranty expires.
A complete Tune-Up Kit, (P/N **96107**), is available which includes assorted parts to maintain and repair motor. A Motor Repair Kit (P/N **96046**) is available which contains special tools for disassembly/assembly of machine.

Gearbox Disassembly:

1. Disconnect tool from power source.
2. Invert machine and secure in vice, using **57092** Collar (Supplied in **96046** Repair Kit) or padded jaw.
3. Disconnect sanding pad by removing **95885** Screws (2) with a 3mm Hex Key.
4. Remove gearbox assembly by removing **95642** Screws (2) and **95641** Hex Nuts with a phillips head screw driver.
5. Carefully separate **57427** Slider Housing halves. Remove one gearbox half, making sure no parts fall to the ground.
6. Remove and set aside the **57433** Slide-Board on non-vacuum models (**57432** on vacuum models), **57431** Transfer Pinion (2), **57438** Counterweight Assembly, **57445** Needle Bearing and the other **57427** Slider Housing half.
7. Clean grease off old dirty components and inspect for damaged parts.

Motor Disassembly:

1. Insert **56058** Lock Ring Wrench (Supplied in **96046** Repair Kit) into corresponding tabs of lock ring and unscrew. Pull with a side to side action to remove motor from housing. Remove **57054** Rear Ring, **57055** Front Ring, **95973** Washer, and **57059** Lock Ring. Motor may now be serviced.
2. Remove **54467** Retaining Ring/Planetary Gear Assembly using (2) **50679** 26mm wrenches (Supplied in **96046** Repair Kit). Set aside.
   Note: See planetary gear disassembly.
3. Remove **57056** Rear Plate By holding **57058** Cylinder with a 2" Bearing Separator and pressing **54470** Rotor Pinion out of **01206** Bearing.
4. Remove **57113** Blade (5), rotor set and **56047** Rotor Key.
5. Disassemble **57437** Front Plate by pressing **54470** Rotor Pinion through front plate. **Note:** One **01139** Bearing will remain on rotor pinion. To remove press pinion through remaining bearing.
6. Press **01206** Rear Bearing from **57056** Bearing Plate.

Planetary Gear Disassembly:

1. Insert **54470** Rotor Pinion into the center of the planetary gear assembly. Install the **56047** Rotor Key into the key way of the rotor pinion, and hold the rotor pinion in a soft jaws vise.
2. Place a 26mm wrench on the flats of the **54467** Retaining Ring and an adjustable 3mm pin spanner wrench into the two empty holes on the **57430** Cam Assembly. Turn counterclockwise to loosen and remove the cam assembly.
3. Remove **95593** Set Screw from Retaining Ring/Planetary Gear Assembly using a 5/64" allen wrench.
4. Remove **54465** Planetary Carrier by pressing out from **01139** Bearing. **02613** Gears (2) and **54475** Shafts (2) can now be removed from planetary carrier.
5. Remove **54468** Ring Gear by tapping retaining ring on a hard surface. Once the ring slides towards the front, it will be necessary to use your fingers to remove it the rest of the way.
   Note: If hard to remove, heat may be applied to retaining ring and pliers used to remove gear.
6. Press **01139** Bearing from **54467** Retaining Ring.

Motor Disassembly Complete.

Drawing #1

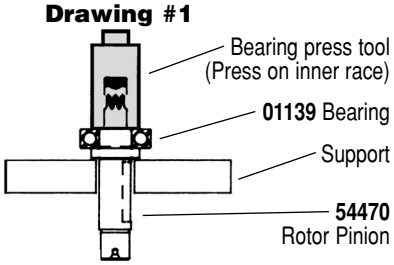

Drawing #2

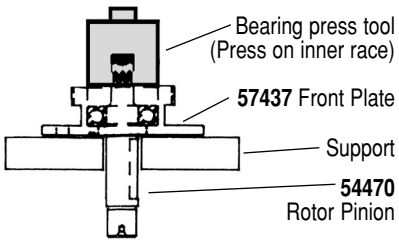

Planetary Gear Assembly:

Important: Be certain all parts are cleaned, properly greased and in good repair before assembling.

1. Press **01139** Bearing into **54467** Retaining Ring.
2. Place **54468** Ring Gear into **54467** Retaining Ring lining up one of the notches with set screw hole.
3. Hand tighten **95593** Set Screw in place using 5/64" hex key.
4. Install lightly greased Planetary Carrier. Place **54475** Shafts into gears.
5. Slide entire Planetary Carrier Assembly into **54467** Retaining Ring (1/4"-28 female thread facing down).
6. Insert **54470** Rotor Pinion into the center of the planetary gear assembly. Install **56047** Rotor Key into the key way of the rotor pinion.
7. Apply 1 drop of #271 Loctite® (or equivalent) to the threads of **57430** Cam Assembly.
8. Place a 26mm wrench on the flats of the **54467** Retaining Ring and an adjustable 3mm pin spanner wrench into the two empty holes on the **57430** Cam Assembly. Turn clockwise to install the cam assembly.

Drawing #3

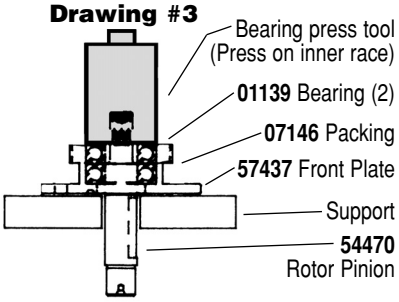

Motor Assembly:

1. Press **01139** Bearing onto Rotor Pinion until seated against shoulder as shown in Drawing 1.
2. Press assembly into **57437** Front Bearing Plate as shown in Drawing 2 and check for smooth rotation.
3. Place **07146** Packing in front plate bore and press **01139** Bearing into bore onto packing as shown in Drawing 3.
4. Invert rotor pinion in support. Install **56047** Rotor Key and **57113** Blade and Rotor Set onto rotor pinion.
   Note: Blades should be lightly lubricated with Dynabrade Air Lube P/N **95842** (or equivalent) before installation.
5. Place **57058** Cylinder Assembly over rotor. The "short" line-up pin goes toward the front plate.
6. Place **57056** Rear Plate (with **01206** Bearing pressed into place) over shaft and "long" end of line-up pin. Press fit in place as shown in Drawing 4.

Drawing #4

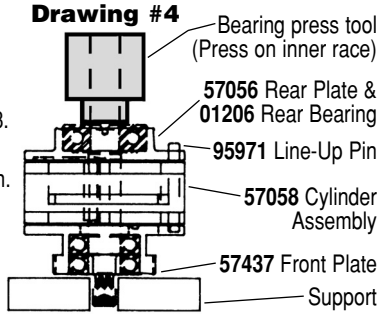

(continued on next page)

Disassembly/Assembly Instructions – Dynaline Sander (continued)

7. Place **57054** Rear Ring over the rear plate and line-up pin. Turn the motor over and place **57055** Front Ring over the front plate making sure the "legs and fingers" on the front and rear rings line-up.
   Note: The small cut-outs on both rings should line-up with the square holes in the cylinder/end plate assembly.
8. Place **95973** Washer and **57059** Lock Ring onto the front ring with one drop of pneumatic tool oil spread between the washer and the lock ring.
9. Secure motor housing in vice, using **57092** Collar or padded jaws. Spread 2-3 drops of pneumatic tool oil around the housing bore for ease of insertion of motor assembly. Slide motor assembly into secured housing.
   Note: Be certain line-up pin enters the pocket in the bottom of the housing and the "legs" of the rings stay in-line.
10. Tighten lock ring with **56058** Lock Ring Tool to 28 N•m/250 in. - lbs.

Gearbox Assembly:

1. Place **57428** Sliders in gearbox halves.
2. Install **57429** Felt Seals into gear housing halves. Using Dynabrade's **95542** Gear Grease (or equivalent), grease entire slider including, transfer pinion holes and groves.
3. Grease slide board gear pack and bearing pocket. Grease **57445** Bearing. Place bearing on **57430** Cam Assembly. Grease counterweight gear packs.
4. Place counterweight over **57430** Cam Assembly with tool inverted and exhaust at six o'clock. Place cam assembly bearing at three o'clock. Take one gear box halve and slide it onto the housing groves.
5. Place transfer pinion on counter weight gear rack, sliding pinion shaft partially into mated hole on slider. Repeat for second shaft.
   Important: Make sure counter weight is positioned dead center of cam assembly when transfer pinions are installed. This ensures correct timing.
6. Making sure needle bearing is still located at three o'clock, place slide board railing into groove on slider while aligning needle bearing into bearing channel on slider board.
7. Place other gearbox half onto grooves of motor housing, making sure all parts align. Press both gear box halves together.
8. Install **95842** Screws and **95841** Nuts and tighten. Install Pad.

Valve And Speed Regulator Disassembly/Assembly:

1. Secure housing in vice using **57092** Collar or padded jaw.
2. Remove inlet bushing, **01468** Spring, **01472** Tip Valve, and **01464** Seal from housing.
3. Remove **95697** Snap Ring. Press the **57064** Speed Regulator and **01447** Valve Stem out of the housing. Remove the **01025** O-Rings (2).
4. Place new **01025** O-Rings (2) on the speed regulator and place in housing with valve stem. Install new **95967** Snap Ring.
5. Place **01464** Seal in housing so the pocket of seal sets horizontal and towards the top of the tool. Using a pair of tweezers or needle nose pliers, place the tip valve in the housing so that its pin goes into the valve stem hole and the hinge seats into the pocket of the seal. Place **01468** Spring into the housing small end first.
6. Spread one drop of # 271 Loctite® (or equivalent) around the first threads of the inlet bushing and tighten into housing to 23 N•m/200 in. - lbs.

Tool Assembly Complete. Please allow 30 minutes for adhesives to cure before operating tool.

Important: Motor should now be tested for proper operation at 90 PSIG. If motor does not operate properly or operates at a higher RPM than marked on the tool, the tool should be serviced to correct the cause before use. Before operating, place 2-3 drops of Dynabrade Air Lube (P/N **95842**) directly into air inlet with throttle lever depressed. Operate tool for 30 seconds to determine if tool is operating properly and to allow lubricating oils to properly penetrate motor.

Loctite® is a registered trademark of Loctite Corp.

Notice:

All Dynabrade motors use the highest quality parts and metals available and are machined to exacting tolerances. The failure of quality pneumatic motors can most often be traced to an unclean air supply or the lack of lubrication. Air pressure easily forces dirt or water contained in the air supply into motor bearings causing early failure. It often scores the cylinder walls and the rotor blades resulting in limited efficiency and power. Our warranty obligation is contingent upon proper use of our tools and cannot apply to equipment which has been subjected to misuse such as unclean air, wet air or a lack of lubrication during the use of this tool.

Note: To order replacement parts specify the model and serial number of your machine.

Model Number	Motor hp (W)	Motor RPM	Sound Level	Maximum Air Flow SCFM (LPM)	Air Pressure PSIG (Bars)	Weight Pound (kg)	Length Inch (mm)	Height Inch (mm)
All Models	.3 (186)	N/A	84-85 dB(A)	18 (510)	90 (6.2)	2.6 (1.2)	7 (178)	3-3/4 (95)

Additional Specifications: Air Inlet Thread 1/4" NPT • Hose Size 1/4" or 6mm

Optional Accessories



Grease and Grease Gun

- Multi-purpose grease for all types of bearing, cams, gears.
- High film strength; excellent resistance to water, steam, etc.
- Workable range 0°F to 300°F.

95541: Push-type grease gun.
95542: 10oz. (283.5g) tube.



96107 Motor Tune-Up Kit:

- Includes assorted parts to help maintain and repair motor.

Visit Our Web Site: www.dynabrade.com **Email:** Customer.Service@Dynabrade.com

DYNABRADE®

DYNABRADE, INC., 8989 Sheridan Drive • Clarence, NY 14031-1490 • Phone: (716) 631-0100 • Fax: 716-631-2073 • International Fax: 716-631-2524
DYNABRADE EUROPE S.àr.l., Zone Artisanale • L-5485 Wormeldange—Haut, Luxembourg • Telephone: 352 76 84 94 1 • Fax: 352 76 84 95 1

©DYNABRADE, INC., 2011
PRINTED IN USA APD11.03_08/11