For Serial No. 08K1800 and Higher

AUTOMOTIVE

Parts Page Reorder No. APD08•08
Effective November, 2008
Supersedes: APD04•07

Dynalocke™ Dual Action Sander

12,000 RPM Air Motor and Machine Parts

Models:

10770 - 3" Pad, Non-Vac
10771 - 3" Pad, Vacuum-Ready
10780 - 3-1/2" Pad, Non-Vac
10781 - 3-1/2" Pad, Vacuum-Ready

⚠WARNING **Always operate, inspect and maintain this tool in accordance with the Safety Code for portable air tools (ANSI B186.1) and any other applicable safety codes and regulations. Please refer to Dynabrade's Warning/Safety Operating Instructions for more complete safety information.**

Index Key

No.	Part #	Description
1		**Sanding Pad:** See Chart
2	**57262**	Balancer Shaft
3	**95630**	Snap Ring
4	**59084**	V-Seal
5	**56052**	Bearing
6	**58474**	Motor Shaft Balancer
7	**54673**	Key
8	**56046**	Lock Ring
9	**59057**	"Top Hat" Seal
10	**59083**	Felt
11	**02695**	Bearing
12	**54630**	Front Bearing Plate
13	**54705**	Rotor/Blade Set (5/pkg.)
14	**56595**	Cylinder (Includes: **95865** Pin)
15	**01020**	O-Ring
16	**54629**	Rear Bearing Plate
17	**01206**	Bearing
18	**56713**	Lock Assembly
19	**96252**	Compression Spring
20	**56705**	Post Cap
21	**57264**	Post Assembly
22	**56712**	Switch Bottom
23	**96478**	O-Ring
24	**Shroud**	
	54458	3"
	54459	3-1/2"
25	**Housing:** See Chart	(Includes: **13161** Grip)
26	**56711**	Switch Top
27	**96489**	Screw
28	**95627**	Pin
29	**56582**	Safety Throttle Lever
30	**98459**	O-Ring
31	**56579**	Valve Stem
32	**56578**	Speed Regulator
33	**01025**	O-Ring (3)
34	**56598**	Seal
35	**51944**	Tip Valve
36	**51943**	Spring
37	**56586***	Vacuum Plug
38	**96459**	O-Ring
39	**56469**	Exhaust Gasket
40	**56468**	Handle Assembly (Includes, **51938** Inlet Screen)
41	**96469**	Screw (2)
42	**96454**	Screw (2)
43	**56597***	Muffler
44	**56596***	Muffler Cap

***Parts included with Non-Vacuum Models Only.**

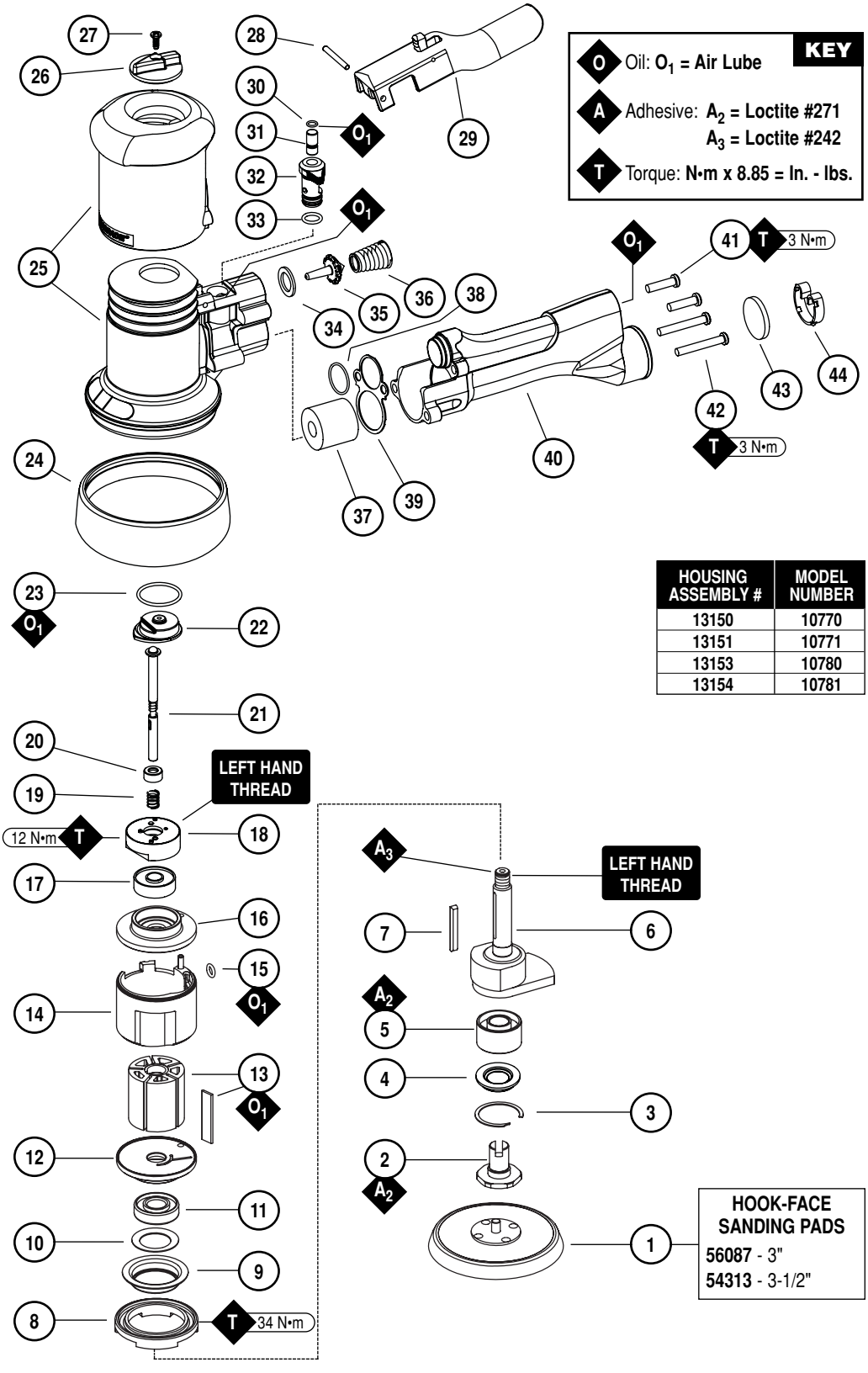

HOUSING ASSEMBLY #	MODEL NUMBER
13150	10770
13151	10771
13153	10780
13154	10781

Important Operating, Maintenance and Safety Instructions

Carefully read all instructions before operating or servicing any Dynabrade® Abrasive Power Tool.
Warning: DO NOT USE pressure sensitive adhesive (PSA) abrasive products on this tool.
Warning: Hand, wrist and arm injury may result from repetitive work motion and overexposure to vibration.
Important: All Dynabrade Rotary Vane air tools must be used with a Filter-Regulator-Lubricator to maintain all warranties.

Operating Instructions:

Warning: Eye, face, respiratory, sound and body protection must be worn while operating power tools. Failure to do so may result in serious injury or death. Follow safety procedures posted in workplace.

1. With power source disconnected from tool, securely fasten abrasive/accessory on tool.
2. Install air fitting into inlet bushing of tool. **Important:** Secure inlet bushing of tool with a wrench before attempting to install the air fitting to avoid damaging valve body housing.
3. Connect power source to tool. Be careful not to depress throttle lever in the process.
4. Air tools are not intended for use in explosive atmospheres and are not insulated for contact with electrical power sources. Sanding/Grinding certain materials can create explosive dust. It is the employers responsibility to notify the user of acceptable dust levels. Sanding/Grinding can cause sparks which can cause fires or explosions. It is the users responsibility to make sure the work area is free of flammable materials.

Maintenance Instructions:

To keep tool safe a preventative maintenance program is recommended whenever portable power tools are used.

1. Check tool speed regularly with a tachometer. If tool is operating at a higher speed than the RPM marked on the tool, the tool should be serviced to correct the cause before use.
2. Some silencers on air tools may clog with use. Clean and replace as required.
3. All Dynabrade Rotary Vane air motors should be lubricated. Dynabrade recommends one drop of air lube per minute for each 20 SCFM (example: if the tool specifications state 40 SCFM, set the drip rate of your filter-lubricator at 2 drops per minute).
   Dynabrade Air Lube (P/N **95842**: 1 pt. 473 ml.) is recommended.
4. It is strongly recommended that all Dynabrade rotary vane air tools be used with a Filter-Regulator-Lubricator to minimize the possibility of misuse due to unclear air, wet air or insufficient lubrication. Dynabrade recommends the following: **10681** Air Line Filter-Regulator-Lubricator — Provides accurate air pressure regulation, two-stage filtration of water contaminants and micro-mist lubrication of pneumatic components.
5. Use only genuine Dynabrade replacement parts. To reorder replacement parts, specify the **Model #**, **Serial #**, and **RPM** of your machine.
6. A Motor Tune-Up Kit (P/N **98220**) is available which includes assorted parts to help maintain motor in peak operating condition. Please refer to Dynabrade's Preventative Maintenance Schedule for a guide to expectant life of component parts.
7. Mineral spirits are recommended when cleaning the tool and parts. Do not clean tool or parts with any solvents or oils containing acids, esters, keytones, chlorinated hydrocarbons or nitro carbons.
8. DO NOT clean or maintain air tools with chemicals that have a low flash point (example: WD-40®).

Safety Instructions:

Products offered by Dynabrade should not be converted or otherwise altered from original design without expressed written consent from Dynabrade, Inc.



- **Important:** User of tool is responsible for following accepted safety codes such as those published by the American National Standards Institute (ANSI).
- Always disconnect power supply before changing abrasive/accessory or making machine adjustments.
- Inspect abrasives/accessories for damage or defects prior to installation on tools.
- Please refer to Dynabrade's Warning/Safety Operating Instructions Tag (Reorder No. **95903**) for more complete safety information.

Notice

All Dynabrade motors use the highest quality parts and metals available and are machined to exacting tolerances. The failure of quality pneumatic motors can most often be traced to an unclean air supply or the lack of lubrication. Air pressure easily forces dirt or water contained in the air supply into motor bearings causing early failure. It often scores the cylinder walls and the rotor blades resulting in limited efficiency and power. Our warranty obligation is contingent upon proper use of our tools and cannot apply to equipment which has been subjected to misuse such as unclean air, wet air or a lack of lubrication during the use of this tool.

Full One Year Warranty

Following the reasonable assumption that any inherent defect which might prevail in a product will become apparent to the user within one year from the date of purchase, all equipment of our manufacture is warranted against defects in workmanship and materials under normal use and service. We shall repair or replace at our factory, any equipment or part thereof which shall, within one year after delivery to the original purchaser, indicate upon our examination to have been defective. Our obligation is contingent upon proper use of Dynabrade tools in accordance with factory recommendations, instructions and safety practices. It shall not apply to equipment which has been subject to misuse, negligence, accident or tampering in any way so as to affect its normal performance. Normally wearable parts such as bearings, contact wheels, rotor blades, etc., are not covered under this warranty.

Model Number	Motor HP (W)	Motor RPM	Pad Dia. Inch (mm)	Sound Level	Maximum Air Flow CFM/SCFM (LPM)	Hose I.D. Size Inch (mm)	Air Inlet Thread	Tool Thread	Weight Pound (kg)	Length Inch (mm)	Height Inch (mm)
10770	.45 (336)	12,000	3 (76)	78 dB(A)	3/23 (651)	1/4 (8)	1/4" NPT	5/16"-24 Female	2.35 (1.0)	10-5/16 (263)	5-3/8 (137)
10771	.45 (336)	12,000	3 (76)	78 dB(A)	3/23 (651)	1/4 (8)	1/4" NPT	5/16"-24 Female	2.35 (1.0)	10-5/16 (263)	5-3/8 (137)
10780	.45 (336)	12,000	3-1/2 (89)	78 dB(A)	3/23 (651)	1/4 (8)	1/4" NPT	5/16"-24 Female	2.35 (1.0)	10-5/16 (263)	5-3/8 (137)
10781	.45 (336)	12,000	3-1/2 (89)	78 dB(A)	3/23 (651)	1/4 (8)	1/4" NPT	5/16"-24 Female	2.35 (1.0)	10-5/16 (263)	5-3/8 (137)

Additional Specifications: Air Pressure 90 PSIG (6.2 Bar)

Disassembly/Assembly Instructions

Important: The manufactures warranty is void if the tool is disassembled before the warranty expires. Use these instructions in conjunction with the Part Number 57260 Tool Repair Kit. This kit includes special tooling for the proper disassembly/assembly of the Two-Hand Dynalocke Sander. This Tooling will be referred to in these instructions. An air motor Tune-Up Kit, Part Number 98220 is also available. It contains the high and medium wear components that most commonly need replacement.

Motor Disassembly:

1. Disconnect the sander from the air supply.
2. Use the **57092** Repair Collar to hold the sander in a vise. Position the sander so that the sanding pad is facing up. **Note:** Do not over tighten the collar and sander in the vise. Only hold the sander snugly, so that the motor lock ring can be removed easily.
3. Use the **50679** 26mm Open End Wrench to remove the sanding pad from the sander by holding the **57262** Balancer Shaft stationary and turning the pad counterclockwise.
4. Use the **56058** Lock Ring Tool to remove the **56046** Lock Ring by turning it counterclockwise.
5. Pull the air motor assembly out of the housing. **Note:** Be aware that the **57264** Post Assembly, **56705** Post Cap, and **96252** Compression Spring will slip easily out of the motor shaft balancer.
6. Secure the counterweight of the motor shaft balancer in a vise equipped with aluminum or bronze jaws so that the motor assembly is pointing up.
7. Use the **50679**, 26mm Open End Wrench to remove the **56713** Lock Assembly by turning it clockwise. (Left Hand Threads)
8. Remove the **01020** O-Ring from the **56595** Cylinder and fasten a 2" bearing separator around the part of the cylinder that is closest to the **54629** Rear Bearing Plate.
9. Place the air motor with the bearing separator attached, onto the **96232**, #2 Arbor Press so that the counterweight is hanging down from the table of the arbor press.
10. Use a 5/16" dia. flat end drive punch as a press tool to push the motor shaft balancer out of the 01206 Bearing.
11. Use the **96213** Bearing Removal Tool to push the **01206** Bearing out of the **54629** Rear Bearing Plate. **Note:** This bearing removal tool is not included in the **96283** Repair Kit.
12. Remove the cylinder, rotor, vanes, key and the **54630** Front Bearing Plate.
13. Use a 2" bearing separator and arbor press to remove the **02695** Bearing.
14. Fasten the balance portion of the motor shaft balancer in a vise equipped with aluminum or bronze jaws so that the **57262** Balancer Shaft is pointing up.
15. Use a small flat blade screwdriver to remove the **95630** Snap Ring.
16. Use the **56056** Bearing Puller to remove the balancer bearing assembly.
17. Fasten the separator between the **57262** Balancer Shaft and the **95628** Bearing Shield.
18. Place the bearing separator on the table of the arbor press so that the hex end of the **57262** Balancer Shaft is pointing down. Use the 3/16" flat end drive punch as a press tool to push the balancer shaft out of the **56052** Bearing. Remove the **56053** Bearing Seal and the **95628** Bearing Shield.

Motor Disassembly Complete.

Motor Assembly:

Important: Clean and inspect all motor parts for wear or defect.

1. Balancer Assembly:
   a) Install the **95630** Snap Ring onto the **57262** Balancer Shaft.
   b) Install the **95628** Bearing Shield onto the balancer shaft so that the convex side is toward the hex portion of the balancer shaft.
   c) Install the **56053** Bearing Seal so that it fits down completely over the shaft step.
   d) Apply a small amount of the Loctite #271 (or equivalent) to the bearing surface of the **57262** Balancer Shaft.
   e) Orient the seal side of the **56052** Bearing toward the hex portion of the balancer shaft. Use the large end of the **57091** Bearing Press Tool along with the **96232**, #2 Arbor Press to push the **56052** Bearing onto the balancer shaft until the I.D. of the bearing sits against the shaft step. (Drawing 1)
2. Place the counterweight of the motor shaft balancer in a vise equipped with aluminum or bronze jaws so that the bearing pocket is pointing up.
3. Apply a small amount of the Loctite #271 (or equivalent) to the outside diameter of the **56052** Bearing. Slide the balancer shaft/bearing assembly all the way into the bearing pocket of the motor shaft balancer. Secure this assembly in the motor shaft balancer by squeezing the **95630** Snap Ring into the groove in the motor shaft balancer.
4. Install the **56046** Lock Ring onto the motor shaft balancer so that the “OFF” inscription is toward the counterweight of the shaft.
5. Use the small end of the **57091** Bearing Press Tool and the arbor press to install the **02695** Bearing all the way onto the motor shaft balancer. (Drawing 2)
6. Install the **54630** Front Bearing Plate onto the **02695** Bearing and check it for smooth rotation. (Drawing 3)
7. Install the **54673** Key so that the 90° side of the key fits into the keyway of the shaft and the tapered side of the key fits into the rotor. Install the **54705** Rotor/Blade Set (5) onto the motor shaft balancer.
8. Apply the **95842** Dynabrade Air Lube (10W/NR or equivalent) to the blades.
9. Install the **56595** Cylinder over the rotor so that the short line-up pin fits into the front bearing plate.
10. Place the **54629** Rear Bearing Plate over the shaft so that the long line-up pin fits through the hole in the rear bearing plate. Use the small end of the **57091** Bearing Press Tool to install the **01206** Bearing onto the motor shaft balancer and into the **54629** Rear Bearing Plate. Use the press tool and the arbor press to install these so that there is a snug fit between the bearing plates and the cylinder. **Note:** Carefully press the **01206** Bearing onto the motor shaft balancer until it touches against the bearing seat on the inside of the bearing plate. (Drawing 4)
11. Secure the counterweight of the motor shaft balancer in a vise equipped with aluminum or bronze jaws so that the motor assembly is pointing up.
12. Apply a small amount of the Loctite #271 to the threads of the motor shaft balancer and use a 26mm Crow Foot Wrench to install the **56713** Lock Assembly by turning it counterclockwise. (Left Hand Thread) (Torque to 12 N·m/100 in. lbs.)
13. Orient the flat side of the **56705** Post Cap toward the flared end of the **57264** Post Assembly and install the post cap. Install the **96252** Compression Spring onto the post assembly and insert the post assembly with the spring and the post cap into the motor shaft balancer.
14. Use the **57092** Repair Collar to hold the housing in a vise so that the opening for the motor is facing up. Note: Do not over tighten the collar and housing in the vise. Only hold the housing snugly, so that the motor and lock ring can be installed easily.
15. Apply a small amount of petroleum lubricant to the **01020** O-Ring and install the o-ring into the air inlet hole in the cylinder.
16. Install the motor assembly into the housing making sure to align the line-up pin with the line-up hole that is on the inside of the housing.
17. Use the **56058** Lock Ring Tool to tighten the lock ring and secure the motor in the housing. (Torque to 34 N·m/300 in. lbs.)
18. Install the appropriate shroud and weight-mated sanding pad.

Motor Assembly Complete.

Handle and Valve Disassembly:

1. Place the **57092** Repair Collar around the housing so that the handle is pointing up.

(continued text and diagrams on next page)

2. Use a Phillips screwdriver to remove the four screws that fasten the handle to the housing. Carefully pull the handle from the housing. This provides access to the tip valve components, also the handle; o-ring, gasket and vacuum plug.
3. Use a 1/8" dia. flat end drive punch to remove the **95627** Pin and the **56582** Throttle Safety Lever.
4. Pull the **56578** Speed Regulator and valve stem out of the housing.

Handle and Valve Disassembly Complete.

Handle and Valve Assembly:

1. Place the **57092** Repair Collar around the housing so that the handle mounting area is facing up.
2. Install the **01025** O-Rings (3) onto the **56578** Speed Regulator, apply a small amount of petroleum lubricant to the o-rings and insert the regulator assembly into the housing. Note: Be careful that the o-rings do not get caught and pulled out of the o-ring grooves.
3. Install the **98459** O-Ring onto the **56579** Valve Stem, apply a small amount of petroleum lubricant to the o-ring and insert the shortest portion (from the end to the o-ring) of the valve stem assembly into the speed regulator.
4. Install the **56582** Throttle Safety Lever onto the housing and secure it in place with the **95627** Pin.
5. Install the **56598** Seal into the air inlet passage of the housing.
6. Install the **56586** Vacuum Plug into the exhaust passage of the housing. (See Exploded View)
7. Use needle-nose pliers to grasp and install the **51944** Tip Valve so that it fits under the 56579 Valve Stem.
8. Install the large end of the **51943** Spring into the air inlet passage of the handle.
9. Install the **56469** Gasket onto the mounting surface of the handle.
10. Apply a small amount of petroleum lubricant to the **96459** O-Ring and install it onto outside diameter of the air inlet passage at the location of the first shoulder.
11. Connect the handle to the housing and secure it in place with the four screws. Note: The two longer screws, Part Number **96454** (2) also secure the **56581** Grip to the housing.
12. Install the **56597** Muffler and secure it in place with the **56596** Muffler Clip. (See Exploded View)

Handle and Valve Assembly Complete. Tool Assembly Complete. Please allow 30 minutes for adhesives to cure before operating tool.

Important: Motor should now be tested for proper operation at 90 PSIG. If motor does not operate properly or operates at a higher RPM than marked on the tool, the tool should be serviced to correct the cause before use. Before operating, place 2-3 drops of Dynabrade Air Lube (P/N **95842**) directly into air inlet with throttle lever depressed. Operate tool for 30 seconds to determine if tool is operating properly and to allow lubricating oils to properly penetrate motor.

Loctite® is a registered trademark of Loctite Corp.

Diagrams

Drawing 1

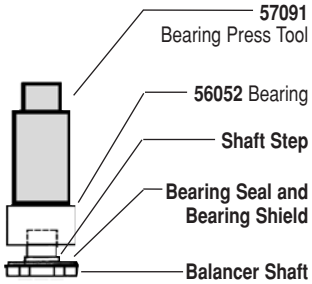

Drawing 2

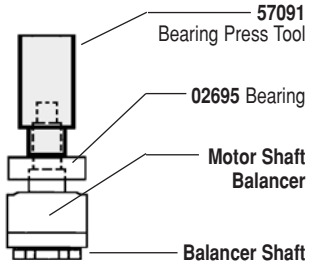

Important: Lock Ring must now be placed over sub-assembly. Not shown in drawings.

Drawing 3

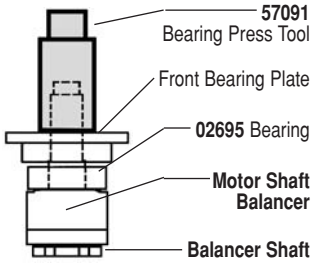

Drawing 4

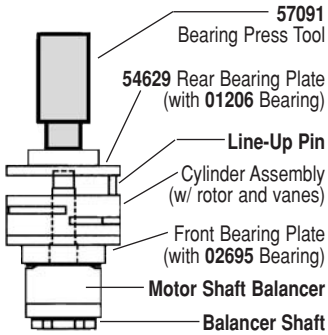

Optional Accessories



98220 Motor Tune-Up Kit

- Includes assorted parts to help maintain and repair motor.



Dynabrade Air Lube

- Formulated for pneumatic equipment.
- Absorbs up to 10% of its weight in water.
- Prevents rust and formation of sludge.
- Keeps pneumatic tools operating longer with greater power and less down time.

95842: 1pt. (473 ml)
95843: 1gal. (3.8 L)



96232 (#2) Arbor Press

- This arbor press is ideal for the disassembly and assembly of air motors.



57260 Motor Repair Kit:

- Contains special tools for disassembly/assembly of machine.



96346 2" Bearing Separator

- Use the separator to remove gears and bearings.

Visit Our Web Site: www.dynabrade.com

Email: Customer.Service@Dynabrade.com

DYNABRADE®

DYNABRADE, INC., 8989 Sheridan Drive • Clarence, NY 14031-1490 • Phone: (716) 631-0100 • Fax: 716-631-2073 • International Fax: 716-631-2524
DYNABRADE EUROPE S.àr.l., Zone Artisanale • L-5485 Wormeldange—Haut, Luxembourg • Telephone: 352 76 84 94 1 • Fax: 352 76 84 95 1

©DYNABRADE, INC., 2008

PRINTED IN USA