Parts Page Reorder No. APD08•04
Effective July, 2008

8" Random Orbital Polisher

Air Tool Manual – Safety, Operation and Maintenance

SAVE THIS DOCUMENT, EDUCATE ALL PERSONNEL

Models:

10787 – 2,500 RPM, 5/8"- 11 Spindle
10788 – 2,500 RPM, M14 x 2 Spindle



Rotary Motion



3/4" Dia. Random Orbit



FIND THE MOST CURRENT OFFERING OF SUPPORT DOCUMENTS AND ACCESSORIES @ WWW.DYNABRADE.COM

⚠ WARNING

Read and understand this tool manual before operating your air tool. Follow all safety rules for the protection of operating personnel as well as adjacent areas. Always operate, inspect and maintain this tool in accordance with the American National Safety Institute (ANSI) Safety Code for Portable Air Tools – B186.1. For additional safety information, refer to Safety Requirements for the Use, Care and Protection of Abrasive Wheels – ANSI B7.1, Code of Federal Regulation – CFR 29 Part 1910, European Committee for Standards (EN) Hand Held Non-Electric Power Tools – Safety Requirements and applicable State and Local Regulations.

SAFETY LEGEND



⚠ WARNING

Read and understand tool manual before work starts to reduce risk of injury to operator, visitors, and tool.

⚠ WARNING

Practice safety requirements. Work alert, have proper attire, and do not operate tools under the influence of alcohol or drugs.





⚠ WARNING

Eye protection must be worn at all times, eye protection to conform to ANSI Z87.1.

⚠ WARNING

Ear protection to be worn when exposure to sound, exceeds the limits of applicable Federal, State or local statues, ordinances and/or regulations.





⚠ WARNING

Respiratory protection to be used when exposed to contaminants that exceed the applicable threshold limit values required by law.

⚠ WARNING

Air line hazard, pressurized supply lines and flexible hoses can cause serious injury. Do not use damaged, frayed or deteriorated air hoses and fittings.



⚠ WARNING

Some dust created by sanding, grinding, drilling, and other construction activities contain chemicals known to cause cancer, birth defects or other reproductive harm. Some examples of these chemicals are:

- Lead from lead-based paints
- Crystalline silica from bricks and cement and other masonry products
- Arsenic and chromium from chemically treated lumber

Your risk from these exposures varies, depending on how often you do this type of work. To reduce your exposure to these chemicals: work in a well ventilated area, and work with approved safety equipment, such as those dust masks that are specially designed to filter out microscopic particles.

SAFETY INSTRUCTIONS

Carefully Read all instructions before operating or servicing any Dynabrade® Abrasive Power Tool.
Products offered by Dynabrade are not to be modified, converted or otherwise altered from the original design without expressed written consent from Dynabrade, Inc.

Tool Intent: 8" Random Orbital Polisher is ideal for buffing and polishing of materials using cleaning and polishing accessories.

Do Not use tool for anything other than its intended applications.
This power tool is not intended for use in potentially explosive atmospheres and is not insulated against contact with electrical power.

Training: Proper care, maintenance, and storage of your tool will maximize performance.

- Employer's Responsibility – Provide 8" Random Orbital Polisher operators with safety instructions and training for safe use of tool and accessories.

Accessory Selection:

- Abrasive/accessory RPM (speed) rating MUST be approved for AT LEAST the tool RPM rating.
- Before mounting an accessory, inspect for defects. Do not use defective accessories.
- Do not use grinding wheels or cut-off wheels.
- Use only recommended accessories. See back page of manual and Dynabrade catalog.
- Follow tool specifications before choosing size and type of accessory.
- Only use recommended fittings and air line sizes. Air supply hoses and air hose assemblies must have a minimum working pressure rating of 150 PSIG (10 Bars, g) or 150 percent of the maximum pressure produced in the system, whichever is higher. (See tool Machine Specifications table.)

OPERATING INSTRUCTIONS

Warning: Always wear eye protection. Operator of tool is responsible for following: accepted eye, face, respiratory, hearing and body protection.

Caution: Hand, wrist and arm injury may result from repetitive work, motion and overexposure to vibration. Vibration level (m/s^2): 5.73. Vibration level was established using ISO 8662-12 with a 70 gram buff attached. Accessories with greater mass will increase vibration levels.

- Keep hand and clothing away from working end of the air tool.
- Working end of the air tool has potential hazard of cutting and severing.

Operation: Be sure that any loose clothing, hair and all jewelry is properly restrained.

- Secure inlet bushing on air tool with a wrench before attempting to install the air fitting to avoid damaging housing assembly.
- BEFORE MOUNTING AN ACCESSORY, after all tool repairs and whenever a 8" Random Orbital Polisher is issued for use, check tool RPM (speed) with tachometer with air pressure set at 90 PSIG while the tool is running. If tool is operating at a higher speed than the RPM marked on the tool housing, or operating improperly, the tool must be serviced and corrected before use.

Caution: Tool RPM must never exceed abrasive/accessory RPM rating. Check accessory manufacturer for details on maximum operating speed or special mounting instructions.

- With power source connected at the air tool relieve hose of air pressure and disconnect tool from air supply when changing recommended accessories.
- Connect air tool to power source. Be careful NOT to depress throttle lever in the process.
- Do not expose air tool to inlet pressure above 90 PSIG or (6.2 Bars).

Caution: After installing the accessory, before testing or use and/or after assembling tool, the 8" Random Orbital Polisher must be started at a reduced speed to check for good balance. Gradually increase tool speed. DO NOT USE if tool vibration is excessive. Correct cause, and retest to insure safe operation.

- Release the throttle lever in case of an interruption of the energy supply.
- Ensure that self-fixing accessories are mounted concentrically.
- Make sure that work area is uncluttered, and visitors are at a safe range from the tools and debris. Potentially explosive atmospheres can be caused by dust and fumes resulting from sanding or grinding. Always use dust extraction or suppression systems which are suitable for the material being processed.
- Proceed with caution in unfamiliar surroundings. Hidden hazards may exist, such as electricity or other utility lines.
- Air tools are not intended for use in explosive atmospheres and are not insulated for contact with electric power sources.
- Use a vise or clamping device to hold work piece firmly in place.
- Work may generate hazardous dust.
- Do not apply excessive force on tool or apply “rough” treatment to it.
- Always work with a firm footing, posture and proper lighting.
- Ensure that sparks and debris resulting from work do not create a hazard.
- This tool is rear exhaust. Exhaust may contain lubricants, vane material, bearing grease, and other materials flushed thru the tool.

Report to your supervisor any condition of the tool, accessories, or operation you consider unsafe.

Air System

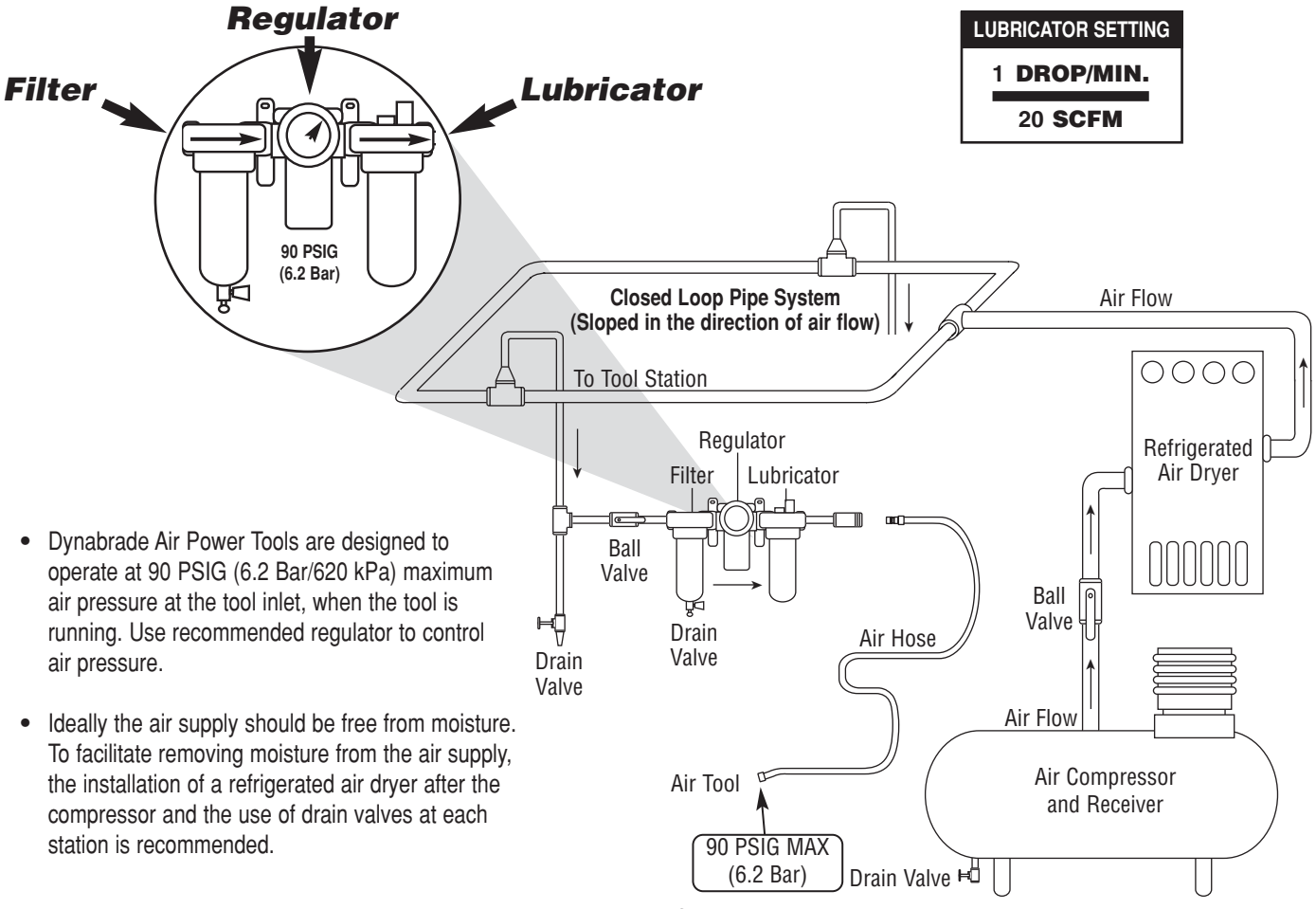

- Dynabrade Air Power Tools are designed to operate at 90 PSIG (6.2 Bar/620 kPa) maximum air pressure at the tool inlet, when the tool is running. Use recommended regulator to control air pressure.
- Ideally the air supply should be free from moisture. To facilitate removing moisture from the air supply, the installation of a refrigerated air dryer after the compressor and the use of drain valves at each station is recommended.

Maintenance Instructions

Important: To keep tool safe a preventative maintenance program is recommended whenever portable power tools are used. The program should include inspection of air supply lines, air line pressure, proper lubrication and repair of tools. Refer to ANSI B186.1 for additional maintenance information.

- Use only genuine Dynabrade replacement parts to insure quality. To order replacement parts, specify **Model#**, **Serial#** and **RPM** of your air tool.
- It is strongly recommended that all Dynabrade rotary vane air tools be used with a Filter-Regulator-Lubricator to minimize the possibility of misuse due to unclean air, wet air or insufficient lubrication. Dynabrade recommends the following: **10681** Air Filter-Regulator-Lubricator (FRL) – Provides accurate air pressure regulation and two stage filtration of water contaminants.
- **Apply 3 plunges of 95542 Grease through grease fitting located on side of angle head with 95541 Grease Gun after every 100 Hours of use.**
- Dynabrade recommends one drop of air lube per minute for each 20 SCFM (example: if the tool specification states 40 SCFM, set the drip rate on the filter-lubricator to 2 drops per minute). Dynabrade Air Lube (P/N **95842**: 1 pt 473 ml) is recommended.

Routine Preventative Maintenance:

- Check the free speed of 8" Random Orbital Polisher by using a tachometer on regular basis.
- BEFORE MOUNTING AN ACCESSORY, after all tool repairs and whenever a 8" Random Orbital Polisher is issued for use, check tool RPM (speed) with tachometer with air pressure set at 90 PSIG while the tool is running. If tool is operating at a higher speed than the RPM marked on the tool housing, or operating improperly, the tool must be serviced and corrected before use.
- Mineral spirits are recommended when cleaning the tool and parts. Do not clean tool or parts with any solvents or oils containing acids, esters, ketones, chlorinated hydrocarbons or nitro carbons.
- DO NOT clean or maintain tools with chemicals that have a low flash point (example: WD-40®).
- A Motor Tune-Up Kit (P/N **98224**) is available which includes high wear and medium wear motor parts.
- Air tool labels must be kept legible at all times, if not, reorder label(s) and replace. User is responsible for maintaining specification information i.e.: Model #, S/N, and RPM. (See Assembly Breakdown)
- Blow air supply hose out prior to initial use.
- Visually inspect air hoses and fittings for frays, visible damage and signs of deterioration. Replace damaged or worn components.
- Refer to Dynabrade's Warning/Safety Operating Instructions Tag (Reorder No. **95903**) for safety information.

After maintenance is performed on tool, add a few drops of Dynabrade Air Lube (P/N **95842**) to the air line and start the tool a few times to lubricate air motor. Check for excessive tool vibration.

Handling and Storage:

- DO NOT rest tool on pad. (See Tool Resting Position Diagram)
- Use of tool rests, hangers and/or balancers is recommended.
- Protect tool inlet from debris (see Notice below).
- DO NOT carry tool by air hose, or near the tool throttle lever.
- Protect abrasive accessories from exposure to water, solvents, high humidity, freezing temperature and extreme temperature changes.
- Store accessories in protective racks or compartments to prevent damage.

Tool Resting Position:

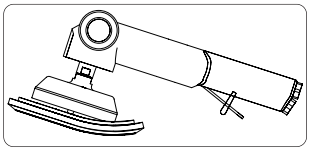

INCORRECT Resting Position

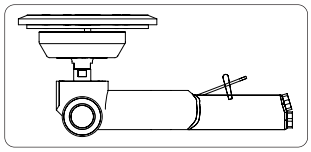

CORRECT Resting Position

Machine Specifications

Model Number	Motor hp (W)	Motor RPM	Pad Dia. Inch (mm)	Sound Level	Maximum Air Flow SCFM (LPM)	Hose I.D. Size Inch (mm)	Air Inlet Thread	Weight Pound (kg)	Length Inch (mm)	Height Inch (mm)
10787	.7 (522)	2,500	8 (177)	82 dB(A)	27 (765)	3/8 (10)	1/4" NPT	8.3 (3.7)	14-3/8 (366)	5-13/16 (148)
10788	.7 (522)	2,500	8 (177)	82 dB(A)	27 (765)	3/8 (10)	1/4" NPT	8.3 (3.7)	14-3/8 (366)	5-13/16 (148)

Additional Specifications: Air Pressure 90 PSIG (6.2 Bar)
Sound Level is the pressure measurement according to the method outlined in ISO regulation ISO-15744

Notice

All Dynabrade motors use the highest quality parts and materials available and are machined to exacting tolerances. The failure of quality pneumatic motors can most often be traced to an unclean air supply or the lack of lubrication. Air pressure easily forces dirt or water contained in the air supply into motor bearings causing early failure. It often scores the cylinder walls and the rotor blades resulting in limited efficiency and power. Our warranty obligation is contingent upon proper use of our tools and cannot apply to equipment which has been subjected to misuse such as unclean air, wet air or a lack of lubrication during the use of this tool.

One Year Warranty

Following the reasonable assumption that any inherent defect which might prevail in a product will become apparent to the user within one year from the date of purchase, all equipment of our manufacture is warranted against defects in workmanship and materials under normal use and service. We shall repair or replace at our factory, any equipment or part thereof which shall, within one year after delivery to the original purchaser, indicate upon our examination to have been defective. Our obligation is contingent upon proper use of Dynabrade tools in accordance with factory recommendations, instructions and safety practices. It shall not apply to equipment which has been subject to misuse, negligence, accident or tampering in any way so as to affect its normal performance. Normally wearable parts such as bearings, contact wheels, rotor blades, etc., are not covered under this warranty.

Models: 10787, 10788

8" Random Orbital Polisher
Complete Assembly

Index Key No.	Part #	Description
1	**96188**	Screw
2	**94594**	Washer (2)
3	**50855**	Pad
4	**94595**	Spacer
5	**95235**	Screw (3)
6	**61392**	Shaft Balancer
7	**61389**	Screw
8	**61387**	Counterweight
9	**56052**	Bearing
10	**61398**	Locking Pin Bushing
11	**61395**	Switch Spring
12	**61393**	Pin
13	**61397**	Spring
14	**61396**	Locking Pin Insert
15	**92517**	Screw (4)
16	**61388**	Counterweight
17	**61386**	Counterweight
18	**61394**	Switch Shaft
19	**61390**	Housing - 5/8"-11
	61391	Housing - M14 x 2
20	**18564**	Spindle - 5/8"-11
	18564	Spindle - M14 x 2
21	**18563**	Key
22	**18562**	Retaining Ring
23	**18561**	Bearing (3)
24	**18560**	Screw (4)
25	**18559**	Washer (4)
26	**18902**	Side Cap
27	**18593**	Bevel Gear
28	**18557**	Wave Washer
29	**18556**	Retaining Ring
30	**18555**	Bearing (3)
31	**18554**	Spacer
32	**18552**	Housing
33	**18553**	Handle
34	**18551**	Plug
35	**18594**	Pinion Gear
36	**18568**	Bearing
37	**18569**	Front Bearing Plate
38	**18570**	Blade (4/pkg.)
39	**18595**	Rotor
40	**18571**	Cylinder
41	**18572**	Pin
42	**18573**	Rear Bearing Plate
43	**18567**	Retaining Ring
44	**18574**	O-Ring
45	**18576**	Gasket
46	**18577**	Spacer
47	**18578**	Gasket
48	**18579**	Valve Housing
49	**18559**	Washer (4)
50	**18580**	Screw (4)
51	**18601**	Grip
52	**18581**	Valve Stem
53	**18582**	Safety Throttle Lever
54	**18583**	Pin
55	**18584**	Valve Seat
56	**18585**	Valve Pin
57	**18586**	Valve
58	**18587**	Valve Spring
59	**18588**	Gasket
60	**18589**	Exhaust Retainer
61	**18592**	Exhaust Bushing
62	**18590**	O-Ring
63	**18591**	Inlet Bushing
64	**51288**	Label - Mdl **10787**
	51289	Label - Mdl **10788**

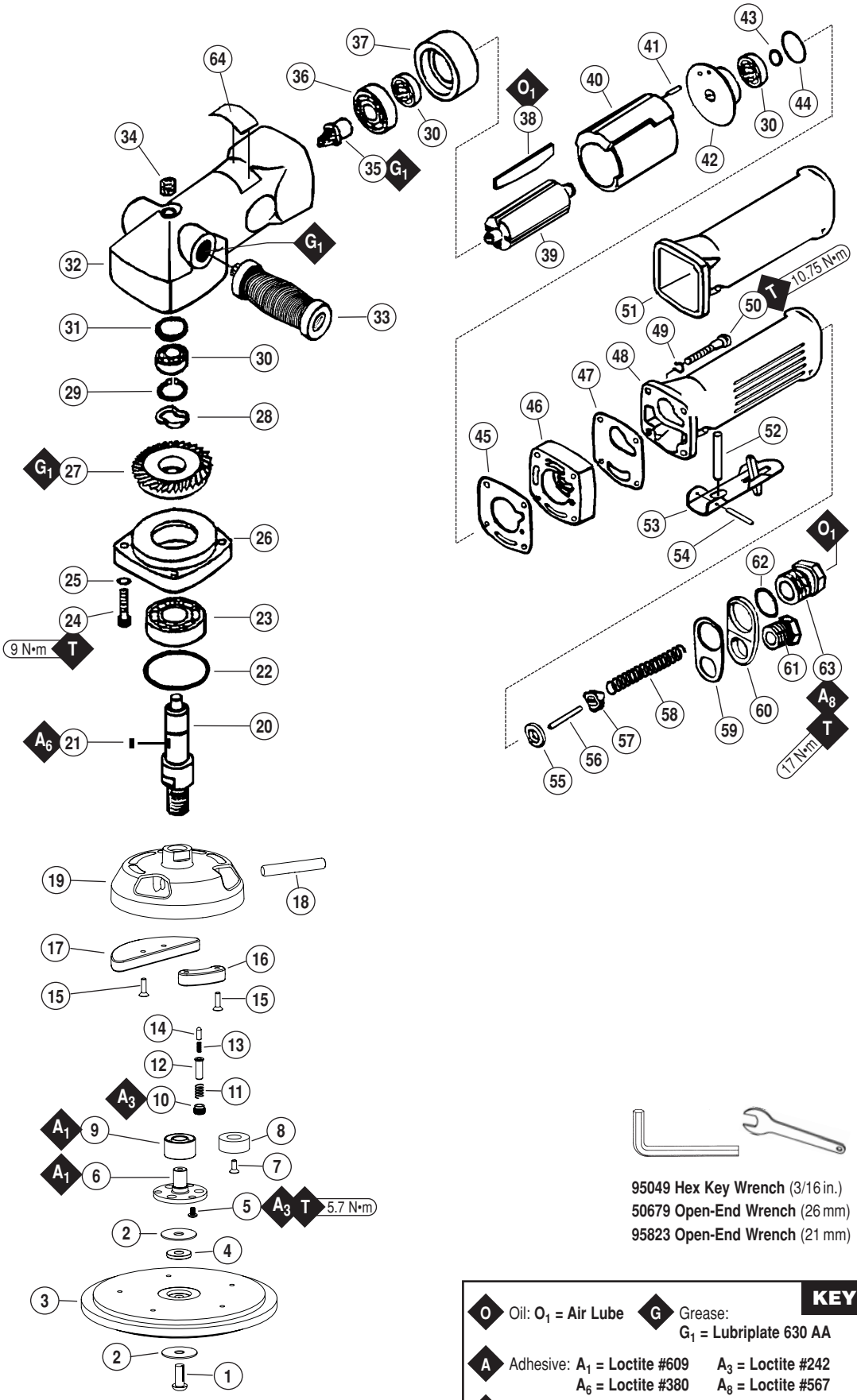

95049 Hex Key Wrench (3/16 in.)
50679 Open-End Wrench (26 mm)
95823 Open-End Wrench (21 mm)

KEY

- O Oil: **O_1 = Air Lube**
- G Grease: **G_1 = Lubriplate 630 AA**
- A Adhesive: **A_1 = Loctite #609**, **A_3 = Loctite #242**, **A_6 = Loctite #380**, **A_8 = Loctite #567**
- T Torque: **N•m x 8.85 = In. - lbs.**

Assembly/Disassembly Instructions

Important: The Manufacturing Warranty is void if the tool is disassembled before the warranty expires by anyone other than a Dynabrade® Approved Repair Technician. Notice: A **98224** Motor Tune-Up Kit is available. Also, the special repair tooling referred to in these instructions can be ordered through your Dynabrade® Distributor. Please refer to this tool manual for correct part number identification.

Important: Always follow these steps before servicing any part of this air tool.

1. **Shut off the air supply and then depress throttle lever to dissipate the remaining air.**
2. **Carefully disconnect the tool from the air supply hose.**
   Note: Use a wrench to hold the air tool inlet bushing stationary when removing the air supply connection.

Orbital Head Disassembly:

1. Slide **61394** Switch Shaft to the random (lock) position. Use the **95823** 21mm wrench to hold the orbital head in position and removed the **96188** Screw with the **95049** 3/16" hex key.
2. Hold the **18552** Housing in a vise with bronze or aluminum jaws so the orbital head assembly is facing up.
3. Apply localized heat to the three **95235** Screws and use a 9/64" hex key to remove these.
4. Apply localized heat to the **57069** Balancer Shaft and remove the shaft along with the **56052** Bearing.
5. Use the **96346** 2" Bearing Separator and the **96232** #2 Arbor Press to remove the **56052** Bearing from the **57069** Balancer Shaft.
6. Apply localized heat to **61398** Locking Pin Bushing and use **96364** Slotted screwdriver to remove.
7. Remove **61935** Switch Spring, **61393** Pin, **61397** Spring, and **61396** Locking Pin Insert.
8. Remove **61394** Switch Shaft from Orbital Head Housing.
9. Use the **95823** 21mm Wrench to remove the orbital head from the spindle.

Orbital Head Disassembly Complete.

Motor Disassembly:

1. Hold the **18552** Housing in a vise with bronze or aluminum jaws so that the **18579** Valve Housing is pointing up.
2. Pull the **18061** Grip off the **18579** Valve Housing. **Note**: A “Hot Air Gun” can be used to warm the **18601** Grip, making it more flexible.
3. Use the **95331** (4mm) Hex Key to remove the **18580** Screws (4), **18559** Washers (4), **18579** Housing, **18578** Gasket, **18577** Spacer, **18574** O-Ring and **18576** Gasket.
4. Carefully slide the air motor out of the **18552** Housing. **Note**: A “Hot Air Gun” can be used to warm and expand the **18552** Housing.
5. Use the **96343** Retaining Ring Pliers to remove the **18567** Retaining Ring.
6. Fasten the **96346**, (2") Bearing Separator carefully between the **18573** Rear Bearing Plate and the **18571** Cylinder and place the separator on the table of the **96232**, (#2) Arbor Press so that the **18594** Pinion Gear is pointing down.
7. Use a 3/16" dia. flat end drive punch as a press tool to push the **18595** Rotor out of the **18555** Bearing.
8. Use the **96213** Bearing Removal Tool and the arbor press to push the **18555** Bearing out of the **18573** Rear Bearing Plate.
9. Fasten the bearing separator around the flange of the **18594** Pinion Gear so that the flat side of the separator is against the **18568** Bearing. With a downward motion, strike the flat side of the separator against the table of the arbor press several times. The **18568** Bearing will slide out of the **18569** Front Bearing Plate.
10. Use a 3/16" dia. flat end drive punch as a press tool and the arbor press to push the **18594** Pinion Gear out of the **18568** Bearing.
11. Use a 3/16" dia. flat end drive punch as a press tool and the arbor press to push the **18595** Rotor out of the front **18555** Bearing. Use the **96213** Bearing Removal Tool and the arbor press to push the **18555** Bearing out of the **18569** Front Bearing Plate.

Motor Disassembly Complete.

Right Angle Gear Disassembly:

1. Use the **95331** (4mm) Hex Key to remove the **18560** Screws (4), and **18559** Washers (4).
2. Fasten the **96346** Bearing Separator under the **18555** Bearing and use a 3/16" dia. flat end drive punch and the **96232**, (#2) Arbor Press to push the bearing from the spindle.
3. Use the **96343** Retaining Ring Pliers to remove the **18556** Retaining Ring, **18557** Wave Washer, **18593** Bevel Gear, and **18563** Key.
4. Use the **96343** Retaining Ring Pliers to remove the **18562** Retaining Ring, and pull the spindle along with the **18561** Bearing out of the **18902** Spindle Cap.
5. Place the **18561** Bearing on the tool plate of the arbor press and push the spindle out of the bearing.

Right-Angle Gear Disassembly Complete.

Motor Assembly:

1. Use the raised outer portion of the **96240** Bearing Press Tool to install the **18555** Bearing into the **18569** Front Bearing Plate.
   Note: Use the **96232** (#2) Arbor Press.
2. Position the **18595** Rotor on the **96231** Tool Plate of the **96232** (#2) Arbor Press so that the rear portion of the rotor body is flat on the tool plate and the spline end is pointing up. Use the **18571** Cylinder as a jig. Place the cylinder over the rotor so that it is also setting on the tool plate. Slip the front bearing/plate assembly over the spline end of the rotor and use the raised center portion of the **96240** Bearing Press Tool to install the front bearing/plate assembly onto the **18595** Rotor. **Note**: Use approximately 3 lbs. (1364g.) of force. Remove the rotor with the bearing/plate assembly from the arbor press. Use a .001" (.03mm) thick feeler gage to check the fit of the bearing plate to the face of the rotor. The clearance between the bearing plate and the face of the rotor should be .001" to .0015" (.03 -.04mm).
3. Place the **18568** Bearing flat on the tool plate of the arbor press and install the **18594** Pinion Gear into the inner race of the bearing.
4. Place the **18569** Front Bearing Plate flat on the tool plate of the arbor press so that the rotor is hanging down. Set the **18568** Bearing on the opening of the **18569** Front Bearing Plate so that the pinion gear is pointing up. Place one end of the **18571** Cylinder against the outer race of the **18568** Bearing and using the cylinder as a press tool, push the **18568** Bearing into the front bearing plate.
5. Apply a small amount of the **95842** Dynabrade Air Lube (10W/NR or equivalent) to the **18570** Blades (4) and install them into the **18595** Rotor.
6. Place the **18573** Rear Bearing Plate flat on the tool plate of the arbor press and use the raised outer portion of the **96240** Bearing Press Tool to install the **18555** Bearing into the rear bearing plate.

(continued on next page)

Assembly/Disassembly Instructions - Continued

7. Position the end of the **18594** Pinion Gear on the tool plate of the arbor press and place the rear bearing/plate assembly on the rear bearing journal of the rotor. **Note**: Make sure that the cylinder line-up pin **18572** aligns with the hole in the rear bearing plate.
8. Use the raised inner portion of the **96240** Bearing Press Tool and the arbor press to push the **18555** Bearing along with the rear bearing plate down onto the rotor until the bearing plate touches the cylinder. This should create a snug fit between the bearing plates and the cylinder. If the fit is too loose, add a slight bit more press (preload). **Note**: A "snug" fit allows the cylinder to be shifted back and forth with a small amount of finger pressure. However, the fit should not be loose or sloppy.
9. Use the **96343** Retaining Ring Pliers to install the **18567** Retaining Ring onto the rotor.
10. Hold the **18552** Housing in a vise with bronze or aluminum jaws so that the motor opening is pointing up.
11. With the bearing plates and the cylinder aligned, apply a film of oil to the outside diameter of the motor. Orient the motor according to the exhaust passage in the **18552** housing and the **18579** Valve Housing. Carefully slide the motor into the **18552** Housing. **Note**: It may be necessary, warm the housing with a "Hot Air Gun". This will expand the housing and facilitate the installation of the motor.
12. Install the **18576** Gasket, **18577** Spacer and **18578** Gasket. These must align with the **18572** Pin, air inlet and exhaust openings.
13. Orient and install the **18579** Valve Housing so that the air inlet and exhaust openings align correctly.
14. Use the **95331** (4mm) Hex Key to fasten the valve housing to the **18552** Housing with the **18559** Washers (4) and the **18580** Screws (4). (Torque to 10.75 N•m/95 in. lbs.)
15. Install the **18601** Grip onto the **18579** Valve Housing. **Note**: A "Hot Air Gun" can be used to warm the **18601** Grip, making it more flexible.
16. Install an air fitting into the **18591** Inlet Bushing and connect to the air supply. Test the air motor for proper operation.

Motor Assembly Complete.

Right Angle Gear Assembly:

1. Wipe off the surface of the **96231** Tool Plate to make sure that it is clean. Place the open side of the **18561** Bearing on the tool plate so that the inner race is supported. Position the spindle into the bearing so that the threaded end is pointing up. Press the spindle and the bearing together.
2. Place the **18902** Spindle Cap on the tool plate so that the open side of the bearing pocket is facing up.
3. Position the spindle with the bearing on the spindle cap so that the threaded end of the spindle is pointing up. Press the spindle with bearing all the way into the spindle cap.
4. Use the **96343** Retaining Ring Pliers to install the **18562** Retaining Ring.
5. Clean the keyway of the spindle with a swab moistened with acetone. Also, clean the **18563** Key with acetone and apply a small amount of Loctite® #380 (or equivalent) to the keyway. Install the key and let the adhesive set.
6. Install and press the **18593** Bevel Gear onto the spindle. Apply a small amount of the **95542** Grease to the bevel gear and pinion.
7. Install the **18557** Wave Washer and use the retaining ring pliers to install the **18556** Retaining Ring.
8. Place the threaded portion of the spindle on the tool plate of the arbor press and use the raised center portion of the **96240** Bearing Press Tool to press the **18555** Bearing onto the spindle.
9. Install the **18554** Spacer into the **18552** Housing so that the raised outer portion of the spacer will be against the outer race of the **18555** Bearing.
10. Orient the air bleed notch of the spindle cap toward the throttle lever and install the spindle assembly into the housing. Check the fit of the gears and for smooth rotation.
11. Use the **95331** (4mm) Hex Key to install the **18560** Screws (4), and **18559** Washers (4). (Torque to 9 N•m/80 in. lbs.)
12. Apply 3 plunges of the **95542** Grease through the grease fitting with the **95541** Lubrication Gun initially, and after every 100-hour interval of use.

Right Angle Gear Assembly Complete.

Orbital Head Assembly:

1. Slide **61394** Switch Shaft into the housing so that it is in the rotary (unlock) position.
2. Install **61935** Switch Spring, **61393** Pin, **61397** Spring, and **61396** Locking Pin Insert.
3. Apply a small amount of the Loctite #242 (or equivalent) to the external threads of **61398** Locking Pin Bushing and install into the orbital head using the **96364** Slotted screwdriver.
4. Wipe all oil and grease for the outside diameter of the **57069** Balancer Shaft with a clean cloth. Wipe all oil and grease from the inside diameter of the **56052** Bearing.
5. Apply a small amount of the Loctite #609 (or equivalent) to the outside diameter of the **57069** Balancer Shaft.
6. Place the **57069** Balancer Shaft on the tool plate of the **96232** #2 Arbor Press. Position the sealed side of the **56052** Bearing on the balancer shaft and use the **57091** Bear Press Tool to install the bearing onto the balancer shaft.
7. Wipe all oil and grease from the outside diameter of the **56052** Bearing and the bearing pocket of the orbital head. Apply a small amount of the Loctite #609 (or equivalent) to the outside diameter of the bearing and install the balancer shaft and the bearing into the orbital head
8. Apply a small amount of the Loctite #242 (or equivalent) to the threads of the three **95235** Screws and install these into the orbital head (Torque to 5.7 N•m/50lb-in.).
9. Use the **95823** 21mm Wrench to install the orbital head assembly on the spindle.
10. Slide **61394** Switch Shaft to the lock position.
11. Assemble the washers and spacer as shown on page 4 and place the backing pad on the **57069** Balancer Shaft. Use the **95823** 21mm Wrench to hold the head stationary while installing the **96168** Screw with a 3/16" hex key (Torque to 11.3 N•m/100lb-in.).
12. Connect the polisher to the air supply hose and check for the proper operation.**Orbital Head Assembly Complete. Polisher Assembly Complete.**

Please allow 30 minutes for adhesives to cure before operating tool.

Important: Motor should now be tested for proper operation at 90 PSIG. If motor does not operate properly or operates at a higher RPM than marked on the tool, the tool should be serviced to correct the cause before use. Before operating, place 2-3 drops of Dynabrade Air Lube (P/N **95842**) directly into air inlet with throttle lever depressed. Operate tool for 30 seconds to determine if tool is operating properly and to allow lubricating oils to properly permeate motor.

Right Angle Gear Lubrication Instructions:

- Apply 3 plunges of the **95542** Grease through the grease fitting with the **95541** Lubrication Gun after every 100-hour interval of use.

Loctite® is a registered trademark of Loctite Corp.

Preventative Maintenance Schedule

For All 8" Random Orbital Polishers

This service chart is published as a guide to expectant life of component parts. The replacement levels are based on average tool usage over one year. Dynabrade Inc. considers one year usage to be 1,000 hours or 50% of a man year.

Parts Common to all Models:

Index #	Part Number	Description	Number Required	High Wear 100%	Medium Wear 70%	Low Wear 30%	Non-Wear 10%
1	96188	Screw	1		X		
2	94594	Washer	2		X		
3	50855	Pad	1	N/A	N/A	N/A	N/A
4	94595	Spacer	1				X
5	95235	Screw	3			X	
6	61392	Shaft Balancer	1			X	
7	61389	Screw	1			X	
8	61387	Counterweight	1				X
9	56052	Bearing	1			X	
10	61398	Locking Pin Bushing	1			X	
11	61395	Switch Spring	1			X	
12	61393	Pin	1			X	
13	91397	Spring	1			X	
14	61396	Locking Pin Insert	1			X	
15	92517	Screw (4)	4			X	
16	61388	Counterweight	1				X
17	61386	Counterweight	1				X
18	61394	Switch Shaft	1			X	
19	See Note	Housing	1				X
20	See Note	Spindle	1			X	
21	18563	Key	1			L	
22	18562	Retaining Ring	1		T		
23	18561	Bearing	3		T		
24	18560	Screw	4			L	
25	18559	Washer	4			L	
26	18902	Side Cap	1			X	
27	18593	Bevel Gear	1			X	
28	18557	Wave Washer	1			L	
29	18556	Retaining Ring	1			D	
30	18555	Bearing	3		T		
31	18554	Spacer	1			X	
32	18552	Housing	1			X	
33	18553	Handle	1			X	
34	18551	Plug	1			X	
35	18594	Pinion Gear	1			X	
36	18568	Bearing	1		T		
37	18569	Front Bearing Plate	1			X	
38	18570	Blade (4/pkg.)	4	T			
39	18595	Rotor	1			X	
40	18571	Cylinder	1			X	
41	18572	Pin	1			X	
42	18573	Rear Bearing Plate	1			X	
43	18567	Retaining Ring	1			D	
44	18574	O-Ring	1		T		
45	18576	Gasket	1		T		
46	18577	Spacer	1			X	
47	18578	Gasket	1		T		
48	18579	Valve Housing	1			X	
49	18559	Washer	4			L	
50	18580	Screw	4			X	
51	18601	Grip	1			X	
52	18581	Valve Stem	1			X	
53	18582	Safety Throttle Lever	1			L	
54	18583	Pin	1			L	
55	18584	Valve Seat	1			X	
56	18585	Valve Pin	1			X	
57	18586	Valve	1			X	
58	18587	Valve Spring	1			X	
59	18588	Gasket	1			X	
60	18589	Exhaust Retainer	1				X
61	18592	Exhaust Bushing	1				X
62	18590	O-Ring	1				X
63	18591	Inlet Bushing	1				X
64	See Note	Label	1			X	

LEGEND	
T	Included in Tune-Up Kit
X	Type of wear, no other comments apply.
L	Easily lost. Care during assembly/disassembly.
D	Easily damaged during assembly/disassembly.
R	Replace each time tool is disassembled.



98224 – Motor Tune-Up Kit

Note: Please refer to page 4 of tool manual for specific part number or number required.

Optional Accessories

FIND THE MOST CURRENT OFFERING OF SUPPORT DOCUMENTS AND ACCESSORIES @ WWW.DYNABRADE.COM



98224 Motor Tune-Up Kit

- Includes assorted parts to help maintain and repair motor.



95542 Grease 10 oz.

- Multi-purpose grease for all types of bearings, cams, gears.
- High film strength; excellent resistance to water, steam, etc.
- Workable range 0˚ F to 300˚ F.



95541 Push-type Grease Gun

- One-hand operation.



53147 Top Mount Handle Assembly

- Allows side handle to be centered over the top of the working end of the tool.



Dynabrade Air Lube

- Formulated for pneumatic equipment.
- Absorbs up to 10% of its weight in water.
- Prevents rust and formation of sludge.
- Keeps pneumatic tools operating longer with greater power and less down time.

95842: 1pt. (473 ml)
95843: 1gal. (3.8 L)



90082 Natural Sheepskin Polishing Pad

Special Repair Tools

Note: Not Shown, Mentioned In Assembly/Disassembly Instructions

96242 Bearing Press Tool
96232 (#2) Arbor Press
96346 (2") Bearing Separator
96213 Bearing Removal Tool
96240 Bearing Press Tool
96231 Tool Plate
95331 4mm Hex

Reference Contact Information

1. **American National Safety Institute – ANSI**
   25 West 43rd Street
   Forth Floor
   New York, NY 10036
   Tel: 1 (212) 642-4900
   Fax: 1 (212) 398-0023
2. **Government Printing Office – GPO**
   Superintendent of Documents
   Attn. New Orders
   P.O. Box 371954
   Pittsburgh, PA 15250-7954
   Tel: 1 (202) 512-1803
3. **European Committee for Standardization**
   Rue de Stassart 36
   B - 1050 Brussels, Belgium

Visit Our Web Site: www.dynabrade.com

Email: Customer.Service@Dynabrade.com

DYNABRADE®

DYNABRADE, INC., 8989 Sheridan Drive • Clarence, NY 14031-1490 • Phone: (716) 631-0100 • Fax: 716-631-2073 • International Fax: 716-631-2524
DYNABRADE EUROPE S.àr.l., Zone Artisanale • L-5485 Wormeldange—Haut, Luxembourg • Telephone: 352 76 84 94 1 • Fax: 352 76 84 95 1

©DYNABRADE, INC., 2008

PRINTED IN USA