AUTOMOTIVE

Parts Page Reorder No. APD02•02
Effective February, 2002

Models:

10551 – 3" Buffer/Sander
10552 – 5" Buffer/Sander
10553 – Mini-Dynorbital
10555 – Versatility Kit

Right-Angle Buffer/Mini-Dynorbital

Two-Handed, Air Powered, 2,400 RPM

⚠WARNING **Always operate, inspect and maintain this tool in accordance with the Safety Code for portable air tools (ANSI B186.1) and any other applicable safety codes and regulations. Please refer to Dynabrade's Warning/Safety Operating Instructions for more complete safety information.**

Index Key

No.	Part #	Description
1	**Pads**	
	90040	5" Foam Pad
	90027	3" Terry Cloth Bonnet
	90028	3" Wool Buff Pad
2	**50125**	3" Hook-Face pad
	50146	5" Hook-Face pad
3	**54018**	Sanding Pad
4	**54476**	Orbital Sanding Head
5	**54021**	Adapter
6	**01139**	Bearing (3)
7	**95593**	Set Screw
8	**54467**	Retaining Ring
9	**54468**	Ring Gear
10	**54465**	Planetary Carrier
11	**06213**	Gear (2) (Incl. **01033** Bearing)
12	**54475**	Shaft (2)
13	**07146**	Packing
14	**56046**	Lock Ring
15	**50659**	Lock Ring Seal
16	**57437**	Front Bearing Plate
17	**54470**	Rotor Pinion
18	**56047**	Rotor Key
19	**95975**	Shim Pack (3/pkg.)
20	**57113**	Rotor/Blade Set (5)
21	**51354**	Cylinder
22	**95971**	Line-Up Pin
23	**57056**	Rear Bearing Plate
24	**01206**	Bearing
25	**10077**	Motor Housing
26	**54192**	Spring
27	**95523**	O-Ring (2)
28	**56076**	Valve Plug
29	**51358**	Grip
30	**01017**	Pin
31	**95020**	Set Screw
32	**01020**	O-Ring
33	**56029**	Valve Stem
34	**54187**	Throttle Lever
35	**54188**	Handle Grip
36	**54689**	Adapter
37	**56091**	Nozzle
38	**54193**	Gasket
39	**57423**	Adapter
40	**54199**	Muffler Seat
41	**54195**	Muffler (3)
42	**54194**	Muffler Cap
43	**01791**	Split Lock Washer (2)
44	**01494**	Inlet Bushing
45	**95720**	Screw (2)

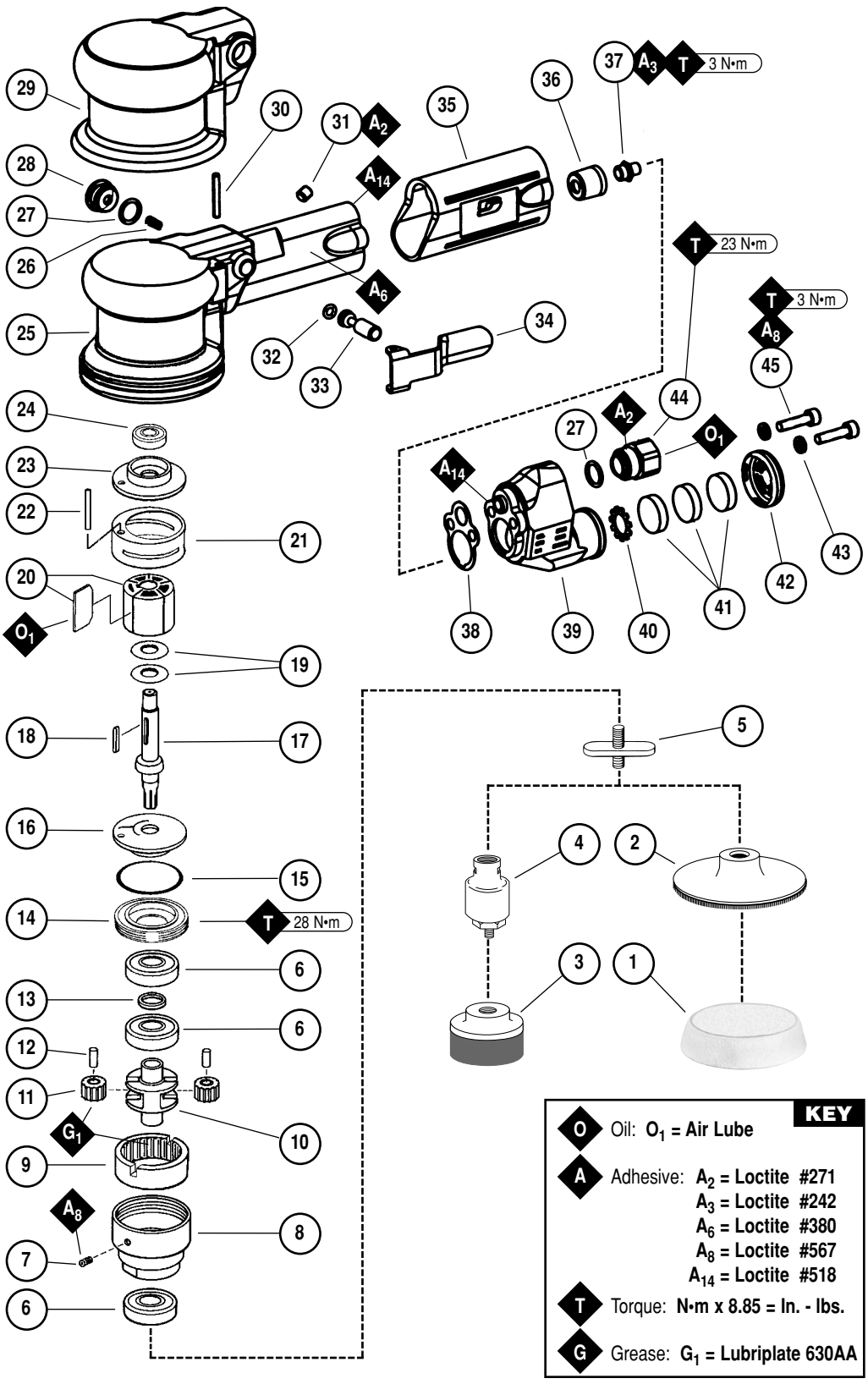

KEY

- **O** Oil: **O_1 = Air Lube**
- **A** Adhesive: **A_2 = Loctite #271**, **A_3 = Loctite #242**, **A_6 = Loctite #380**, **A_8 = Loctite #567**, **A_{14} = Loctite #518**
- **T** Torque: **N•m x 8.85 = In. - lbs.**
- **G** Grease: **G_1 = Lubriplate 630AA**

Important Operating, Maintenance and Safety Instructions

Carefully read all instructions before operating or servicing any Dynabrade® Abrasive Power Tool.
Warning: Hand, wrist and arm injury may result from repetitive work motion and overexposure to vibration.
Important: All Dynabrade Rotary Vane air tools must be used with a Filter-Regulator-Lubricator to maintain all warranties.

Operating Instructions:

Warning: Eye, face, respiratory, sound and body protection must be worn while operating power tools. Failure to do so may result in serious injury or death. Follow safety procedures posted in workplace.

1. With power source disconnected from tool, securely fasten abrasive/accessory on tool.
2. Install air fitting into inlet bushing of tool. **Important:** Secure inlet bushing of tool with a wrench before attempting to install the air fitting to avoid damaging valve body housing.
3. Connect power source to tool. Be careful **not** to depress throttle lever in the process.
4. Check tool speed with tachometer. If tool is operating above 8,250 RPM the tool should be serviced to correct the cause before use.

Maintenance Instructions:

1. Check tool speed regularly with a tachometer. If tool is operating at a higher speed than the RPM marked on the tool, the tool should be serviced to correct the cause before use.
2. Some silencers on air tools may clog with use. Clean and replace as required.
3. All Dynabrade Rotary Vane air motors should be lubricated. Dynabrade recommends one drop of air lube per minute for each 10 SCFM (example: if the tool specifications state 40 SCFM, set the drip rate of your filter-lubricator at 4 drops per minute).
   Dynabrade Air Lube (P/N **95842**: 1 pt. 473 ml.) is recommended.
4. An Air Line Filter-Regulator-Lubricator must be used with this air tool to maintain all warranties. Dynabrade recommends the following: **11405** Air Line Filter-Regulator-Lubricator — Provides accurate air pressure regulation, two-stage filtration of water contaminants and micro-mist lubrication of pneumatic components. Operates 40 SCFM @ 100 PSIG has 3/8" NPT female ports. If Dynabrade air lube is not compatible with paint system it may be substituted with a compatible air tool lubricant with water absorbing properties to prevent internal components from rusting.
5. Use only genuine Dynabrade replacement parts. To reorder replacement parts, please specify the **Model #**, **Serial #** and **RPM** of your machine.
6. A Motor Tune-Up Kit (P/N **96531**) is available which includes assorted parts to help maintain motor in peek operating condition. Please refer to Dynabrade's Preventative Maintenance Schedule for a guide to expectant life of component parts.
7. Mineral spirits are recommended when cleaning the tool and parts. Do not clean tool or parts with any solvents or oils containing acids, esters, keytones chlorinated hydrocarbons or nitro carbons.

Safety Instructions:

Products offered by Dynabrade should not be converted or otherwise altered from original design without expressed written consent from Dynabrade, Inc.



- **Important:** User of tool is responsible for following accepted safety codes such as those published by the American National Standards Institute (ANSI).
- Operate machine for one minute before application to workpiece to determine if machine is working properly and safely before work begins.
- Always disconnect power supply before changing abrasive/accessory or making machine adjustments.
- Inspect abrasives/accessories for damage or defects prior to installation on tools.
- Please refer to Dynabrade's Warning/Safety Operating Instructions Tag (Reorder No. **95903**) for more complete safety information.
- **Warning:** Hand, wrist and arm injury may result from repetitive work, motion and overexposure to vibration.

Notice

All Dynabrade motors use the highest quality parts and metals available and are machined to exacting tolerances. The failure of quality pneumatic motors can most often be traced to an unclean air supply or the lack of lubrication. Air pressure easily forces dirt or water contained in the air supply into motor bearings causing early failure. It often scores the cylinder walls and the rotor blades resulting in limited efficiency and power. Our warranty obligation is contingent upon proper use of our tools and cannot apply to equipment which has been subjected to misuse such as unclean air, wet air or a lack of lubrication during the use of this tool.

One Year Warranty

Following the reasonable assumption that any inherent defect which might prevail in a product will become apparent to the user within one year from the date of purchase, all equipment of our manufacture is warranted against defects in workmanship and materials under normal use and service. We shall repair or replace at our factory, any equipment or part thereof which shall, within one year after delivery to the original purchaser, indicate upon our examination to have been defective. Our obligation is contingent upon proper use of Dynabrade tools in accordance with factory recommendations, instructions and safety practices. It shall not apply to equipment which has been subject to misuse, negligence, accident or tampering in any way so as to affect its normal performance. Normally wearable parts such as bearings, contact wheels, rotor blades, etc., are not covered under this warranty.

Model Number	Motor HP (W)	Motor RPM	Pad Dia. Inch (mm)	Sound Level	Air Flow Rate CFM/SCFM (LPM)	Air Pressure PSIG (Bars)	Spindle Thread	Weight Pound (kg)	Length Inch (mm)	Height Inch (mm)
10551	.25 (186)	2,400	3" (76)	79 dB(A)	2/18 (510)	90 (6.2)	1/4"-20 male	2.4 (1.05)	9-1/8 (231)	3-1/4 (83)
10552	.25 (186)	2,400	1-1/4" (32)	79 dB(A)	2/18 (510)	90 (6.2)	1/4"-20 male	2.8 (1.2)	9-1/8 (231)	4-3/4 (121)
10553	.25 (186)	2,400	3-1/2" (89)	79 dB(A)	2/18 (510)	90 (6.2)	1/4"-20 male	2.4 (1.05)	9-1/8 (231)	3-1/4 (83)

Additional Specifications: Air Inlet Thread 1/4" NPT • Hose I.D. Size 1/4" (8 mm)

Disassembly/Assembly Instructions – Right-Angle Tools

Important: Manufacturers warranty is void if tool is disassembled before warranty expires.
A complete Tune-Up Kit , (P/N **96531**), is available which includes assorted parts to maintain motor in tip-top shape. A Motor Repair Kit (P/N **96046**) is available which contains special tools for disassembly/assembly of machine.

To Disassembly:

1. Invert machine and secure in vice, using **57092** Collar (supplied in **96046** Repair Kit) or padded jaw.
2. Insert **56058** Lock Ring Wrench (supplied in **96046** Repair Kit) into corresponding tabs of lock ring and unscrew. Motor may now be serviced.
3. Remove **54021** Adapter by removing **95593** Set Screw sing 5/64" allen wrench (supplied in **96046** Repair Kit). Place allen wrench in set screw hole to stop rotation of **54465** Planetary Carrier. Use a 14 mm wrench to unscrew adapter (supplied in **96046** Repair Kit).
4. Remove **54467** Retaining Ring using two **50679** 26 mm Wrenches (supplied in **96046** Repair Kit).
5. Remove **54465** Planetary Carrier by pressing out from **01139** Bearing. The **06213** Gears can now be removed from planetary carrier.
6. Remove **54468** Ring Gear by tapping retaining ring on a hard surface, once the ring gear slides towards the front, it will be necessary to use your fingers to remove it the rest of the way.
   Note: If **54468** Ring Gear is difficult to remove, apply heat to retaining ring and pliers to remove gear the rest of the way.
7. Press **01139** Bearing from **54467** Retaining Ring.
8. Remove **56039** Rear Plate by holding onto **51354** Cylinder (bearing puller may be placed into exhaust slots on cylinder) and pressing **54470** Rotor Pinion out of **01206** Bearing.
9. Remove **57113** Blades (5) and rotor set. Remove **56047** Rotor Key.
10. Disassemble **54474** Front Plate by pressing **54470** Rotor Pinion through front plate.
    Note: One **01139** Bearing will remain on rotor pinion. To remove, press pinion through remaining bearing.
11. Press **01206** Rear Bearing from **56039** Rear Bearing Plate.

Motor Disassembly Complete.

To Assemble:

Important: Be certain all parts are cleaned, properly greased and in good repair before assembling.

1. Press **01139** Bearing onto rotor pinion until seated against shoulder as shown in Drawing 1.
2. Press assembly (Drawing 1) into **54474** Front Plate as shown in Drawing 2 and check for smooth rotation.
3. Place **07146** Packing in front plate bore and press **01139** Bearing into packing (Drawing 3).
4. Invert rotor pinion in support. Install **56047** Rotor Key and **57113** Blade and Rotor Set onto rotor pinion.
   Important: Place the correct number of shims from the **95975** Shim Pack under rotor to achieve a .0015" space between rotor and front plate. **Note:** Blades should be lubricated with **95842** Dynabrade Air Lube or equivalent before installation into rotor slots.
5. Place **51354** Cylinder Assembly over rotor. The “short” line-up pin goes toward the front plate.
6. Place **56039** Rear Plate (with **01206** Bearing pressed into place) over shaft and “long” end of line-up pin. Press fit in place as shown in Drawing 4.
7. Press **01139** Bearing into **54467** Retaining Ring.
8. Place **54468** Ring Gear into **54467** Retaining Ring lining up one of the notches with set screw hole.
9. Place **54465** Planetary Carrier with **06213** Gears and **54475** Shafts into **54467** Retaining Ring (1/4"-28 female thread, facing down).
10. Align **54465** Planetary Carrier with splined end of **54470** Rotor Shaft.
11. Screw retaining ring assembly onto front plate and tighten using two 26 mm wrenches.
12. Place a 5/64" allen wrench into retaining ring set screw hole and tighten **54021** Adapter with 14 mm wrench.
13. Hand tighten **95593** Set Screw in place using 5/64" allen wrench.
    Note: Be sure notch on ring gear is lined up with set screw hole.
14. Secure motor housing in vice using **57092** Collar or padded jaws. Slide motor assembly into housing.
    Note: Be certain line-up pin enters the line-up hole at the bottom of housing bore.
15. Place **56046** Lock Ring and **50659** Lock Ring Seal, with legs of lock ring facing out, into housing bore and tighten lock ring with **56058** Lock Ring Wrench to 28 N•m (250 lbs. - in.). Attach desired accessory to adapter.

Drawing #1

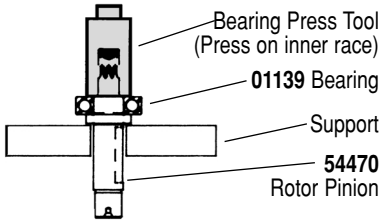

Drawing #2

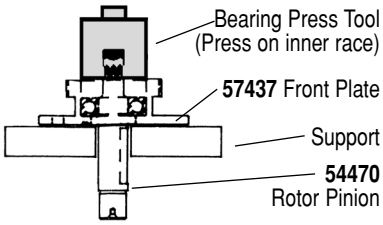

Drawing #3

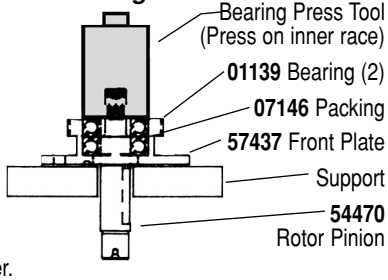

Valve And Speed Regulator Disassembly/Assembly:

1. Secure housing in vice using **57092** Collar or padded jaw.
2. Remove **56076** Valve Plug. Remove the **95523** O-Ring.
3. Remove **54192** Spring, and **56029** Valve Stem with o-ring.
4. Install new **95523** O-Ring onto **56076** Valve Plug, and new **01022** O-Ring onto **56029** Valve Stem.
5. Place valve stem into housing, alone with **54192** Spring.
6. Install **56076** Valve Plug and new **95523** O-Ring.

Tool Assembly Complete. Please allow 30 minutes for adhesives to cure before operating tool.

Drawing #4

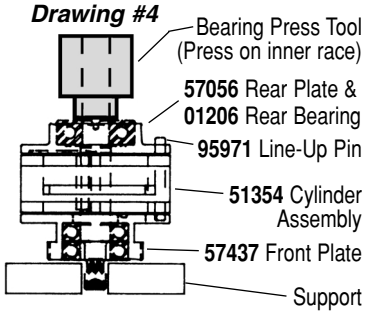

Important: Motor should now be tested for proper operation at 90 PSIG. If motor does not operate properly or operates at a higher RPM than marked on the tool, the tool should be serviced to correct the cause before use. Before operating, place 2-3 drops of Dynabrade Air Lube (P/N **95842**) directly into air inlet with throttle lever depressed. Operate tool for 30 seconds to determine if tool is operating properly and to allow lubricating oils to properly penetrate motor

Loctite® is a registered trademark of Loctite Corp.

Optional Accessories



Finesse Sanding Creme



Dynabrade Glaze

Finesse Sanding Creme

- A sanding compound for metal, fiberglass and composites. Use with fine-grade sanding discs.

95723: 4 oz. (118 ml).
95724: 1 qt. (946 ml).
95725: 1 gal. (3.8 l).

Dynabrade Glaze

- For use with slow-speed tools to achieve a high gloss after compounding.

95727: 4 oz. (118 ml). **95728:** 1 qt. (946 ml).



96531 Motor Tune-Up Kit:

- Includes assorted parts to help maintain and repair motor.



96046 Motor Repair Kit:

- Contains special tools for disassembly/assembly of machine.



Grease and Grease Gun

- Multi-purpose grease for all types of bearing, cams, gears.
- High film strength; excellent resistance to water, steam, etc.
- Workable range 0°F to 300°F.

95541: Push-type grease gun.
95542: 10oz. (283.5g) tube.


Terry Cloth


Synthetic Wool

Polishing/Buffing Pads (Hook Face Backing)		
Diameter	Part	Description
3"	**90027**	Terry Cloth
3"	**90028**	Synthetic Wool
3"	**90038**	Foam Flat Face
3-1/2"	**90034**	Natural Wool

- Scrim back.
- Mount to **50120** or **50125** Hook Face Pads.



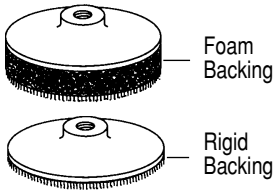

3" Diameter Hook Face Pads
50120: Foam Backing
50125: Rigid Backing

4" - 5" Diameter Hook Face Pads
50146: Rigid Backing

- Accepts reattachable abrasive discs as well as polishing buff pads.
- 6,000 RPM maximum.
- 1/4"-20 female thread.

"Very Soft" Density

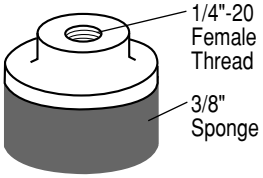

"Soft" Density

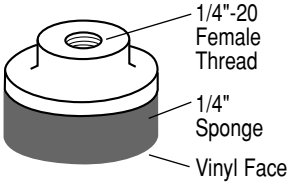

"Medium" Dual-Density

Order vinyl face pads **54091** or **54092** for wet sanding operations.

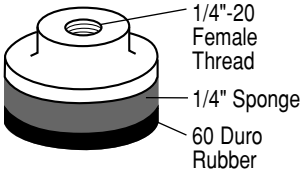

"Hook 'n Loop"

For use with abrasive impregnated non-woven nylon discs.

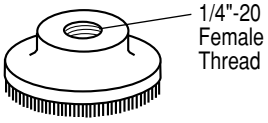

"Soft" Locking-Type

For optional **54029**, **54030** or **54035** Sanding Head.

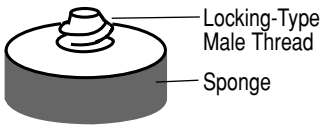

All pads are 5,000 RPM maximum.

Part No.	Pad Dia.	Description/ Face	Thread Type	Comments
54017	3/4"	Medium/Rubber	1/4"-20 Female	For PSA Discs
54018	1-1/4"	Medium/Rubber	1/4"-20 Female	For PSA Discs
54031	1-1/4"	Soft	Locking-Type	For PSA Discs
54085	3/4"	Very Soft	1/4"-20 Female	For PSA Discs
54086	1-1/4"	Very Soft	1/4"-20 Female	For PSA Discs
54087	3/4"	Soft/Vinyl	1/4"-20 Female	For PSA Discs
54088	1-1/4"	Soft/Vinyl	1/4"-20 Female	For PSA Discs
54089	3/4"	Hook 'n Loop	1/4"-20 Female	Non-Woven Nylon Discs
54090	1-1/4"	Hook 'n Loop	1/4"-20 Female	Non-Woven Nylon Discs
54091	3/4"	Medium/Vinyl	1/4"-20 Female	For PSA Discs
54092	1-1/4"	Medium/Vinyl	1/4"-20 Female	For PSA Discs

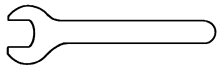
95262 14 mm Open-End Wrench.

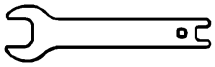
95281 19 mm Open-End Wrench.

Visit Our Web Site: www.dynabrade.com

Email: Customer.Service@Dynabrade.com

DYNABRADE®

DYNABRADE, INC., 8989 Sheridan Drive • Clarence, NY 14031-1490 • Phone: (716) 631-0100 • Fax: 716-631-2073 • International Fax: 716-631-2524
DYNABRADE EUROPE S.àr.l., Zone Artisanale • L-5485 Wormeldange—Haut, Luxembourg • Telephone: 352 76 84 94 1 • Fax: 352 76 84 95 1

©DYNABRADE, INC., 2002

PRINTED IN USA