Models:
10240 – 5"
10245 – 5" With Hang Plate

5" Automotive Dynabuffer

Air Motor and Machine Parts

⚠WARNING **Always operate, inspect and maintain this tool in accordance with the Safety Code for portable air tools (ANSI B186.1) and any other applicable safety codes and regulations. Please refer to Dynabrade's Warning/Safety Operating Instructions for more complete safety information.**

Index Key

No.	Part #	Description
1		5" Pad (not included)
2	**57369**	Lip Seal Shroud
3	**57069**	Balancer Shaft
4	**95630**	Snap Ring
5	**95628**	Washer
6	**56053**	Seal
7	**56052**	Bearing
8	**57323**	Shaft Balancer
9	**54673**	Key
10	**02695**	Bearing
11	**56046**	Lock Ring
12	**54630**	Front Bearing Plate
13	**54705**	Blade (5) & Rotor Set
14	**54631**	Cylinder (Incl. **95865** Pin)
15	**95865**	Pin
16	**54629**	Rear Bearing Plate
17	**01206**	Bearing
18	**95626**	Retaining Ring
19	**95523**	O-Ring (2)
20	**97165**	Hanger (Model **57245** Only)
21	**10242**	Housing Model – **10240**
	10247	Housing Model – **10245**
22	**57382**	Gasket
23	**56671**	Handle
24	**95886**	Flat Washer (4)
25	**01211**	Lock Washer (6)
26	**97010**	Screw (4)
27	**96123**	Screw (2)
28	**57396**	Valve Stem
29	**01464**	Seal (2)
30	**01472**	Tip Valve
31	**01468**	Spring
32	**56673**	Gasket
33	**56672**	Adapter
34	**98597**	Snap Ring
35	**96328**	O-Ring
36	**57321**	Throttle Lever
37	**01017**	Pin
38	**01494**	Inlet Bushing
39	**96421**	Flat Washer (2)
40	**01788**	Screw (2)
41	**54199**	Muffler Seat
42	**54195**	Muffler (3)
43	**54194**	Muffler Cap
44	**01024**	O-Ring (2)
45	**57343**	Speed Regulator

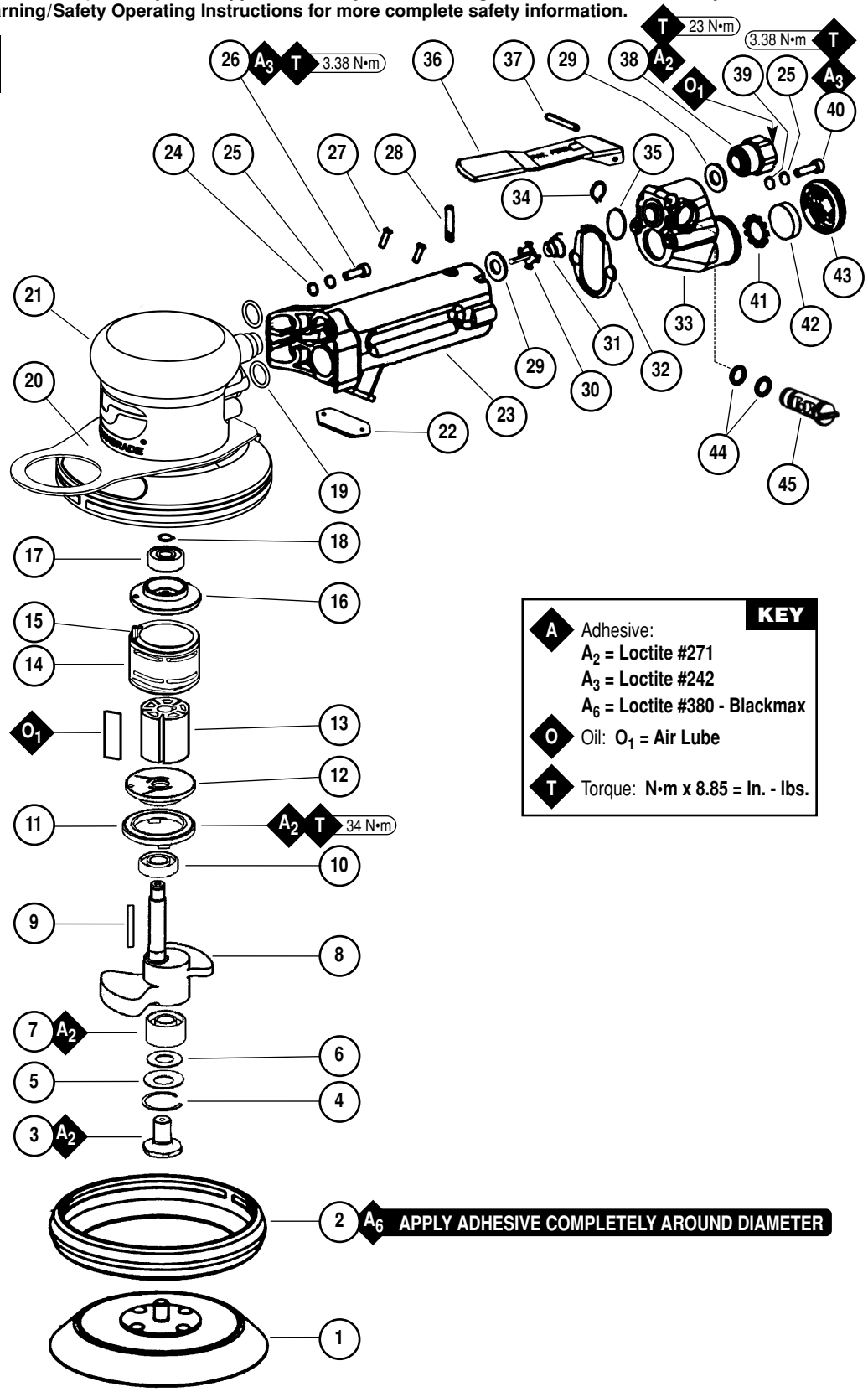

KEY

- **A** Adhesive: **A_2 = Loctite #271**, **A_3 = Loctite #242**, **A_6 = Loctite #380 - Blackmax**
- **O** Oil: **O_1 = Air Lube**
- **T** Torque: **N•m x 8.85 = In. - lbs.**

Important Operating, Maintenance and Safety Instructions

Carefully read all instructions before operating or servicing any Dynabrade® Abrasive Power Tool.
Warning: Hand, wrist and arm injury may result from repetitive work motion and overexposure to vibration.
Important: All Dynabrade Rotary Vane air tools must be used with a Filter-Regulator-Lubricator to maintain all warranties.

Operating Instructions:

Warning: Eye, face, respiratory, sound and body protection must be worn while operating power tools. Failure to do so may result in serious injury or death. Follow safety procedures posted in workplace.

Caution: This tool is not to be run at free speed for any length of time. The tool is specifically designed to be low in vibration under load. Running the tool at free speed may cause the buffing pad to become dislodged from the back-up pad.

1. All initial set-up and maintenance to the tool should be done with the air line disconnected from the tool.
2. Install air fitting into inlet bushing of tool. The inlet bushing is a 1/4" NPT, for optimal performance of the tool. Either directly couple the air line to the tool or use a quick couple fitting with a large inlet hole such as Dynabrade's P/N **95675**. **Important:** Secure inlet bushing of tool with a wrench before attempting to install the air fitting to avoid damaging valve body housing.
3. While there may be other applications suited for this tool it has been specifically designed for the automotive market to be used as the second step of a special two step operation to remove paint imperfections in the clear coat of automotive finishes. The correct back-up pad and buffing pad are required to correctly operate the tool. Attach a back-up pad to the tool that is compatible with the paint system. A variety of 3M 5" Hook-It pads with a 5/16"-24 male stud have been successful as well as Dynabrade pads, for best results contact a Dynabrade or 3M representative.
4. A waffle pad such as 3M P/N **01912** is required to be attached to the back-up pad. Pre-condition a virgin pad thoroughly with 3M Final Finish Finesse-It Compound 3M P/N **82876** before attaching it to the tool. Once the pad has been conditioned this process need not be done until a new waffle pad is required either due to wear or the compound has been allowed to set up rendering the pad useless.
5. Apply a small (15 mm) dab of Final Finish on the repaired area, and position tool on the repair surface. Apply approximately a 10 pound load on the pad before throttling the tool on. Adjust the force on the pad as required to feel the "sweet spot" (low vibration). Buff 10-12 seconds flat followed by 2-3 seconds with the tool tipped up on an angle. Release the throttle lever and then remove the tool from the work piece.
6. Installing a new waffle pad can be safely accomplished when the tool is connected to the air line if when holding the tool upside down the operator places their fingers between the housing and the lever. Holding the tool in this manner eliminates any possibility of the tool turning on during the pad changing operation. It is recommended to practice this grip with the air line disconnected from the tool to become comfortable with the procedure before performing operation with the air line connected.
7. When carrying the tool which is still connected to the air line the operator should insert their thumb between the handle and lever to eliminate possibility of activating the tool.
8. Additional safety accessories are available see the safety instructions below for further details.

Maintenance Instructions:

1. Through use of tool the mufflers may clog, hamper performance and require replacement.
2. Check tool speed regularly with a tachometer. A Magnetic Tachometer such as Dynabrade P/N **96368** is the simplest way to perform this operation. There are two test conditions to assure that the tool is running properly, these conditions being free speed and under load. The free speed is a simple check to quickly determine if the tool is out of specification. Checking under load requires additional test equipment but assures the proper operation of the tool. All speed testing must be done with 90 psig of air at the inlet bushing, a Pressure Gage such as Dynabrade P/N **94315** is required. The tool should run between 10,000 RPM and 12,000 RPM free speed with 90 psig at the tool inlet bushing. If the tool is running outside these speeds it should be serviced to correct the cause before use. The under load condition can be checked by outfitting the tool with the proper back-up pad, waffle pad and buffing cream as outlined in the operating instructions. Apparatus is also required to monitor the load applied to the work surface. Dynabrade offers a Load Cell P/N **80025** that allows the tool to be tested on a a bench. First zero out the scale by adjusting the knob on the side of the load cell to read zero when the tool, back-up pad, and waffle are resting on the wear plate of the load cell while connected to the air line. Apply a 10 pound load to the load cell and using the digital tachometer check he operating speed of the tool. The tool should be running 5,500 RPM minimum. If the tool is running outside this range it should be serviced to correct the cause before use.
3. All Dynabrade Rotary Vane air motors should be lubricated. Dynabrade recommends using Dynabrade Air Lube (P/N **95842**: 1pt. 473ml.) at a rate of 1 drop per minute. If Dynabrade Air Lube is not compatible with paint system it may be substituted with a compatible air tool lubricant with water absorbing properties to prevent internal components from rusting.
4. An Air Line Filter-Regulator must be used with this air tool to maintain all warranties. Dynabrade recommends the following: **11405** Air Line Filter-Regulator-Lubricator — Provides accurate air pressure regulation, two-stage filtration of water contaminants and micro-mist lubrication of pneumatic components. Operates 40 SCFM @ 100 PSIG has 3/8" NPT female ports.
5. Use only genuine Dynabrade replacement parts. To reorder replacement parts,please specify the **Model #**, **Serial #** and **RPM** of your machine.
6. A Motor Tune-Up Kit (P/N **96122**) is available which includes assorted parts to help maintain motor in peak operating condition.
7. Mineral spirits are recommended when cleaning the tool and parts. Do not clean tool or parts with any solvents or oils containing acids, esters, keytones, chlorinated hydrocarbons or nitro carbons.

Safety Instructions:

Products offered by Dynabrade should not be converted or otherwise altered from original design without expressed written consent from Dynabrade, Inc.



- **Important:** User of tool is responsible for following accepted safety codes such as those published by the American National Standards Institute (ANSI).
- Tool should not be running for extended periods of time free speed as it is not balanced for this condition. Avoid running the tool at free speed with a buffing pad installed onto the back-up pad as it may dislodge from the tool..
- Always disconnect the air line before changing the back-up pad or making machine adjustments.
- Inspect abrasives/accessories for damage or defects prior to installation on tools.
- Follow the handling instructions outlined in the operating instructions when carrying the tool and when changing buff pads. Additional safety items are available from Dynabrade such as a Safety Lock Lever P/N **01188** and a Slide Valve P/N **96297**.
- Please refer to Dynabrade's Warning/Safety Operating Instructions Tag (Reorder No. **95903**) for more complete safety information.
- **Warning:** Hand, wrist and arm injury may result from repetitive work, motion and overexposure to vibration.
- **Warning:** Never run the tool without shroud properly adhered to tool.

Notice

All Dynabrade motors use the highest quality parts and metals available and are machined to exacting tolerances. The failure of quality pneumatic motors can most often be traced to an unclean air supply or the lack of lubrication. Air pressure easily forces dirt or water contained in the air supply into motor bearings causing early failure. It often scores the cylinder walls and the rotor blades resulting in limited efficiency and power. Our warranty obligation is contingent upon proper use of our tools and cannot apply to equipment which has been subjected to misuse such as unclean air, wet air or a lack of lubrication during the use of this tool.

Full One Year Warranty

Following the reasonable assumption that any inherent defect which might prevail in a product will become apparent to the user within one year from the date of purchase, all equipment of our manufacture is warranted against defects in workmanship and materials under normal use and service. We shall repair or replace at our factory, any equipment or part thereof which shall, within one year after delivery to the original purchaser, indicate upon our examination to have been defective. Our obligation is contingent upon proper use of Dynabrade tools in accordance with factory recommendations, instructions and safety practices. It shall not apply to equipment which has been subject to misuse, negligence, accident or tampering in any way so as to affect its normal performance. Normally wearable parts such as bearings, contact wheels, rotor blades, etc., are not covered under this warranty.

Motor Assembly/Disassembly Instructions

Important: Manufacturers warranty is void if tool is disassembled before warranty expires.
These instructions are for use in conjunction with Part Number 96405 Repair Kit, which includes special tools for proper disassembly/assembly of tool. A complete Tune-Up Kit, part number 96122 is available which includes assorted parts to help maintain motor in tip-top shape.

To Disassemble:

1. Invert machine and secure in vice, using **57092** Collar (supplied in **96405** Repair Kit) or padded jaws.
2. Remove back-up pad with **50679** Open-End Wrench (supplied with sander).
3. Insert **56058** Lock Ring Wrench (supplied in **96405** Repair Kit) into corresponding tabs of lock ring and unscrew. Motor may now be lifted out for service.
4. Remove **95626** Retainer Ring. Upper motor may now be disassembled.
5. The **54629** Rear Bearing Plate contains a "press" fit bearing. Remove the rear plate assembly by securing the **54631** Cylinder in a standard 2 inch bearing separator or use a standard bearing puller gripped on the cylinder inlet/exhaust area. Push the motor shaft balancer through the bearing. Remove cylinder, rotor, vanes and key.
6. Remove **54630** Front Plate and **02695** Front Motor Bearing, using a small #2 arbor press. Support the edges of the front plate while pressing on the small end of the motor shaft balancer. The **54630** Front Plate should separate from **02695** Front Motor Bearing.
7. Remove **01206** Bearing from the **54629** Rear Bearing Plate by using a bearing press tool.
8. Disassemble the balancer assembly as follows:
   a.) Remove **95630** Snap Ring. Screw the threaded portion of the **56056** Bearing Puller (supplied in **96405** Repair Kit) into the **57069** Balancer Shaft. **Note:** Heat the outside of the motor shaft balancer to approximately 200° F. Now, using the slider weight, pull the assembly out.
   b.) Press off **56052** Bearing and remove loose parts.

To Assemble:

Important: Be certain parts are clean and in good repair before assembling.

1. Assemble the balancer assembly as follows:
   a.) Install **95630** Snap Ring onto **57069** Balancer Shaft. Install **95628** Shield with convex face toward hex of balancer shaft.
   b.) Install **56053** Bearing Seal. **Note:** Be certain seal is pressed completely over shaft step.
   c.) Apply a slight amount of #271 Loctite® (or equivalent) to inside diameter of the **56052** Bearing and the outside diameter of the **57069** Balancer Shaft.
   d.) Press fit **56052** Bearing, with seal side toward hex of balancer shaft, up to shaft step using **57091** Bearing Press Tool (supplied in **96405** Repair Kit) (Drawing 1).
2. Place the motor shaft balancer in a soft jaw vise with large end-up.
3. Apply a slight amount of #271 Loctite® (or equivalent) and spread over several places around the outside diameter of the **56052** Bearing and slide balancer shaft assembly into the motor shaft balancer until **56052** Bearing is firmly seated at bottom. Squeeze **95630** Snap Ring into groove in motor shaft balancer to complete the assembly. Remove from vise.
4. Press **02695** Bearing onto the motor shaft balancer down to the shoulder using **57091** Bearing Press Tool (Drawing 2).
5. Place **56046** Lock Ring onto motor shaft balancer.
6. Press **54630** Front Bearing Plate onto **02695** Bearing and check for smooth rotation (Drawing 3).
7. Place **54673** Rotor Key, **54671** Rotor, and **54674** Blades onto shaft. **Note:** Care should be taken to install rotor key. Two of the long edges are radiused, these should be orientated such that they interface with the rotor. Be certain rotor "floats" easily on the shaft. Because the design of this motor uses a "floating rotor". There is no need to set or adjust gap between the rotor and the end plates.
8. Place **54631** Cylinder over rotor. The "short" line-up pin goes toward the **54630** Front Bearing Plate.
9. Place **54629** Rear Bearing Plate (with **01206** Rear Bearing pressed into place) over shaft and "long" end of line-up pin and press fit in place (Drawing 4).
10. Install **95626** Retaining Ring concave side toward motor. **Note:** Be certain that retaining ring is completely pressed down onto its groove on the shaft.
11. Grease the rubber seals inside the housing using a small amount of multi purpose grease or petroleum jelly.
    Note: Be certain that rubber seals in housing have not pulled out of their seat during disassembly. If this has happened re-seat seals by pushing them until they are flush with inside diameter.

Drawing 1

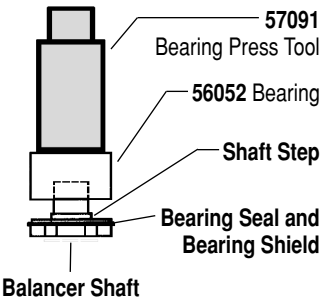

(continued on next page)

Drawing 2

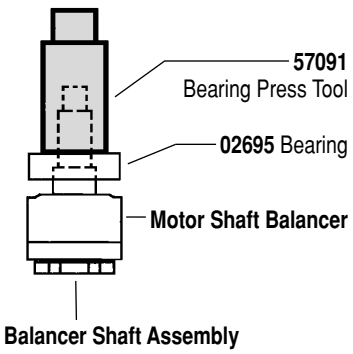

Drawing 3

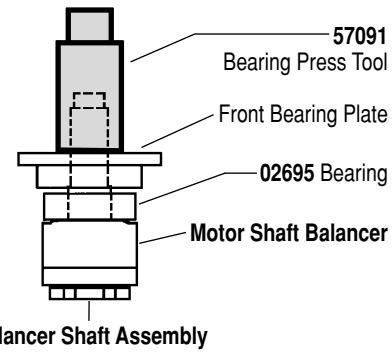

Drawing 4

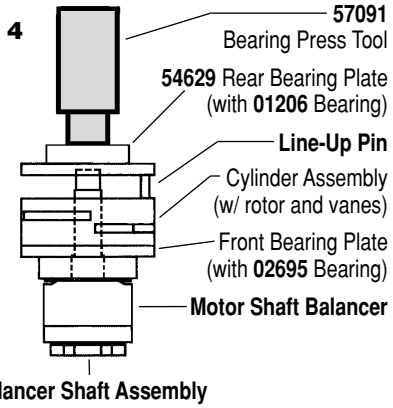

Motor Disassembly/Assembly Instructions *(continued)*

11. Secure motor housing in vise, using **57092** Collar or padded jaws. Apply #271 Loctite® (or equivalent) to threads of **57332** Lock Ring. Slide motor assembly into secured housing.
    Note: With handle pointing toward you while looking into motor bore, be certain line-up pin enters slot to right side of center.
12. Tighten **57332** Lock Ring with **56058** Lock Ring Tool to 34 N•m/300 in. - lbs.

To Disassemble Valve And Speed Regulator Assemblies:

1. Invert tool and place in soft jaw vise or use **57092** Repair Collar.
2. Loosen and remove **01788** Screws (2) , **96421** Flat Washers (2), and **01211** Lock Washers (2) from **56672** Adapter.
3. Carefully remove **56672** Adapter making sure no parts fall to the ground. On non-vacuum and central vacuum models: pry off **54194** Muffler Cap and remove **54195** Muffler (3).
4. Remove **57343** Speed Regulator by detaching **98597** Retaining Ring with a pair of snap ring pliers. Remove **01024** O-Rings with a small screwdriver or razor. If replacement is required.
5. Remove tip valve assembly from housing.

To Assemble Valve And Speed Regulator Assemblies:

1. Lightly lubricate **01024** O-Rings and slide them on **57343** Speed Regulator. Install through regulator hole on **57373** Adapter. Place **98597** Retaining Ring on groove of speed regulator using a pair of retaining ring pliers.
2. Line-up hole in valve stem with inlet hole in handle. Place **01464** Seal in handle. Insert **01472** Tip Valve so that metal pin goes through the valve stem. Place **01468** Spring into the housing, small end first.
3. Gently line-up **56672** Adapter onto handle so no parts shift when tightening. Insert **01211** Lock Washer (2) and **96421** Flat Washer (2) on **01788** Screw, then apply a small amount of #242 Loctite (or equivalent) to threads of **01788** Screw and tighten to 30 N•m/265 in. - lbs. Repeat with remaining screw.

Motor Assembly Complete. Please allow 30 minutes for adhesives to cure before operating tool.

Important: Motor should operate 5,500 RPM minimum when under the load defined in the Maintenance Instructions. Before operating, we recommend that 3-4 drops of Dynabrade Air Lube or pneumatic tool oil be placed directly into the air inlet with throttle lever depressed. Operate tool for 30 seconds under load to determine if machine is operating properly and to allow lubricating oils to properly dispense through machine.

Loctite® is a registered trademark of the Loctite Corp.

Model Number	Motor HP (W)	Motor RPM	Sound Level	Pad Dimensions Inch (mm)	Orbit Diameter Inch (mm)	Maximum Air Flow CFM/SCFM (LPM)	Spindle Thread	Weight Pound (kg)	Length Inch (mm)	Height Inch (mm)
All Models	.36 (270)	10,000	79 dB(A)	5 (127)	.6 (14)	3/23 (651)	5-16"-24 female	2.7 (1.2)	10-1/4 (260)	4-1/2 (114)

Additional Specifications: Air Inlet Thread 1/4" NPT • Hose Size 3/8" (10 mm) • Air Pressure 90 PSIG (6.2 Bars)

Accessories



96122 Motor Tune-Up Kit:
- Includes assorted parts to help maintain and repair motor.

96405 Motor Repair Kit: (not pictured)
- Contains special tools for Disassembly/Assembly of machine.



01188 Safety Lock Lever
- A **57375** Valve Stem must be used in conjunction with this lever to function properly.



96431 Tune-Up Video

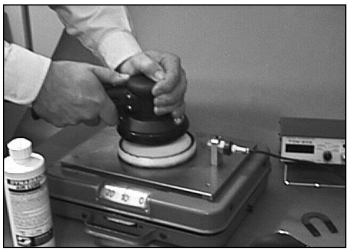

80030 Training and Maintenance Test Equipment Kit:
- **80025** Load Cell measures tool RPM under load and useful for training operators for proper buffing pressure/operation. Electronic tachometer pick-up securely fastens to wear plate.
- **94315** Pressure Gage to ensure peak operating performance.
- **95842** Air Lube formulated for pneumatic tools. Prevents rust and formation of gum/sludge for longer tool operation with greater power and less downtime.
- **96368** Tachometer used to measure tool RPM.



Filter-Regulator-Lubricator
11405: 40 SCFM @ 100 PSIG, 3/8" NPT female ports.
- Provides accurate air pressure regulation, two stage filtration of water/contaminants and lubrication of pneumatic components.

Visit Our Web Site: www.dynabrade.com **Email:** Customer.Service@Dynabrade.com

DYNABRADE®

DYNABRADE, INC., 8989 Sheridan Drive • Clarence, NY 14031-1490 • Phone: (716) 631-0100 • Fax: 716-631-2073 • International Fax: 716-631-2524
DYNABRADE EUROPE S.àr.l., Zone Artisanale • L-5485 Wormeldange—Haut, Luxembourg • Telephone: 352 76 84 94 1 • Fax: 352 76 84 95 1
©DYNABRADE, INC., 2001
PRINTED IN USA