Parts Page Reorder No. 52702
Effective June, 1994

.7 Hp/3" Gearless Depressed Center Wheel Grinder

Model:
52702 — 18,000 RPM

WARNING **Always operate, inspect and maintain this tool in accordance with the Safety Code for portable air tools (ANSI B186.1) and any other applicable safety codes and regulations. Please refer to Dynabrade's Warning/Safety Operating Instructions for more complete safety information.**

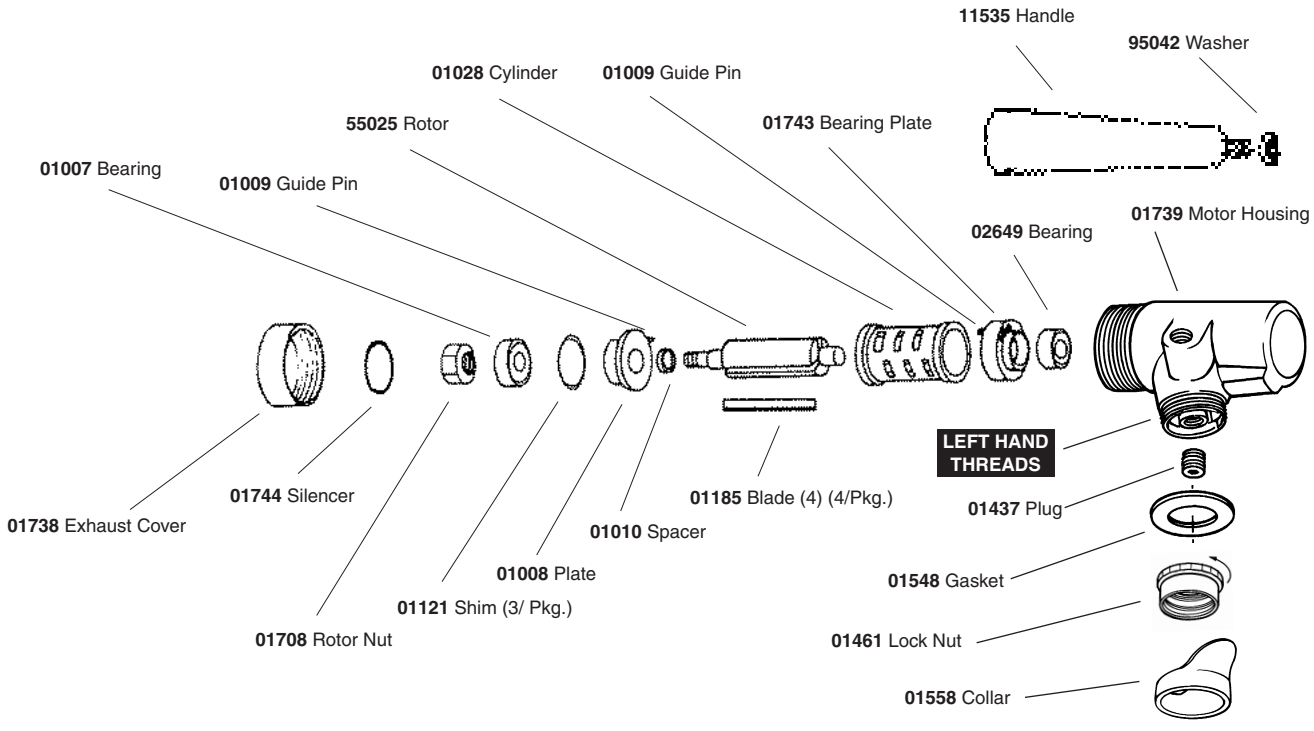

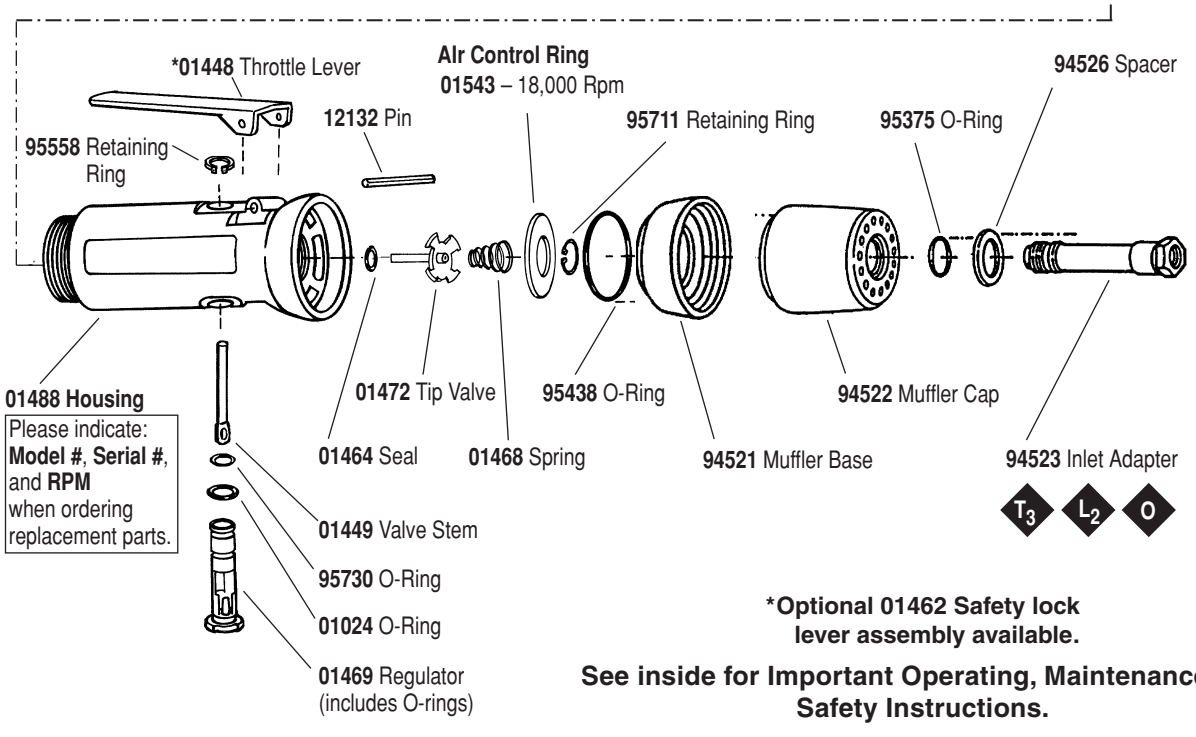

***Optional 01462 Safety lock lever assembly available.**

See inside for Important Operating, Maintenance and Safety Instructions.

Wheel Guard Assembly

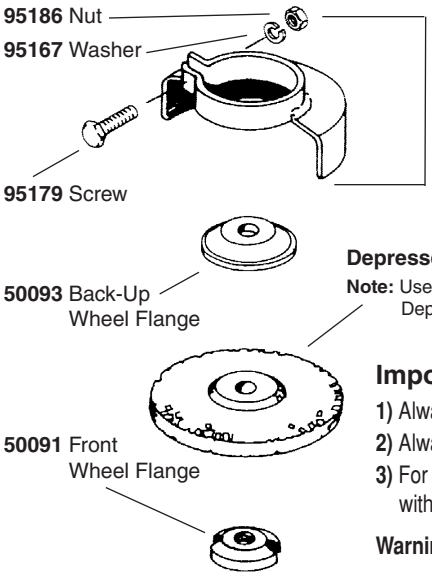

50227 Wheel Guard Assembly
Includes:
95167 Washer
95179 Screw
95186 Nut

Depressed Center Wheel (not included)
Note: Use only Type 27 Reinforced Depressed Center Wheels.

Important Safety Information

1) Always use eye, face and body protection.
2) Always use wheel guard.
3) For safe use of this tool, always comply with OSHA, ANSI Standards B7.1 and B186.1.

Warning: Do Not Remove Wheel Guard.

Wrenches

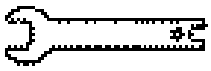

95281 19 mm wrench

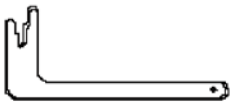

95270 Wrench



96045 Tune-Up Kit
Includes assorted parts to help maintain motor in tip-top shape.

Important Operating, Maintenance and Safety Instructions

Carefully read all instructions before operating or servicing this or any Dynabrade® Abrasive Power Tool.
Warning: Hand, wrist and arm injury may result from repetitive work motion and overexposure to vibration.
Important: All Dynabrade air tools must be used with a Filter-Regulator-Lubricator to maintain all warranties.

Operating Instructions:

Warning: Eye, face and body protection must be worn while operating power tools. Failure to do so may result in serious injury or death. Follow safety procedures posted in workplace.

1. With power source disconnected from tool, securely fasten abrasive/accessory on tool.
2. Connect power source to tool. Be careful **not** to depress throttle lever in the process.
3. Check tool speed with tachometer. If tool is operating at a higher speed than the RPM marked on the tool or operating improperly, the tool should be serviced to correct the cause before use.

Maintenance Instructions:

Products offered by Dynabrade should not be converted or otherwise altered from original design without expressed written consent from Dynabrade, Inc.

1. Check tool speed regularly with a tachometer. If tool is operating at a higher speed than the RPM marked on the tool, the tool should be serviced to correct the cause before use.
2. Some silencers on air tools may clog with use. Clean and replace as required.
3. All Dynabrade air motors should be lubricated with two drops of Dynabrade Air Lube (P/N 95842: 1pt. 473ml.) every four hours of use.
4. An air line filter-regulator-lubricator must be used with this air tool to maintain all warranties. Dynabrade recommends the following: **11289** Air Line Filter-Regulator-Lubricator — Provides accurate air pressure regulation, two-stage filtration of water contaminants and micro-mist lubrication of pneumatic components. Operates 28 CFM @ 90 PSI has 3/8" NPT female ports.

Safety Instructions:

- **Important:** User of tool is responsible for following accepted safety codes such as those published by the American National Standards Institute (ANSI).
- **Never** mount bonded grinding wheels.
- Operate machine for one minute before application to workpiece to determine if machine is working properly and safely before work begins.
- Always use proper guards. Make sure guards are in proper position, secure and in good repair.
- Always disconnect power supply before changing abrasive or making machine adjustments.
- Inspect abrasives for damage or defects prior to installation on tools.
- Please refer to Dynabrade's Warning/Safety Operating Instructions Tag (Reorder No. 95903) for more complete safety information.
- **Warning:** Hand, wrist and arm injury may result from repetitive work, motion and overexposure to vibration.



Toll Free (U.S.A.) 1-800-828-7333
Toll Free (Can.) 1-800-344-1488

DYNABRADE, INC., 8989 Sheridan Drive • Clarence, New York 14031-1490 • Telephone: (716) 631-0100 • Fax: 716-631-2073 • International Fax: 71-231-2524
DYNABRADE EUROPE s.a.r.l., Zone Artisanale • L-5485 Wormeldange—Haut, Luxembourg • Telephone: 352 76 84 94 • Fax: 352 76 84 95
©DYNABRADE, INC., 1994
PRINTED IN USA